APPENDIX 7

ILLUSTRATIONS

A. GENERAL. Methods of demilitarization for general supply items are breaking, deforming, crushing, cutting or smelting. Examples of specific methods are illustrated in the figures in this manual. Conventional ammunition is normally demilitarized by burnout, washout, detonation or dumping at sea. Of the possible cutting methods, the cutting torch is the most thorough but it is the most time consuming. If a power shear is used, it should be of adequate size and power to preclude equipment breakdown. The use of precision cutting torch fixtures, precision cutting saws or precision tools of any kind to minimize mutilation is forbidden. Crushing to the extent that an item is flattened and completely destroyed is the preferred method of mutilation.

WARNING: If a power shear is used, adequate safety precautions should be taken to prevent any flying fragments from injuring personnel. A holding fixture should be installed on the shear so that guns or other items need not be held by hand during cutting.

B. ILLUSTRATIONS. The figures illustrated correspond to the figures mentioned in appendices 4 and 5.

C. ADDITIONAL ASSISTANCE. This appendix contains only a small sampling of the data available. For instructions, drawings, photographs, schematics, etc., of items not found in this appendix, contact the Defense Logistics Agency, DLA-SMP, (DSN) 284-6763/64, or through the DoD Demilitarization Bulletin Board System (via modem), (DSN) 284-4216 or commercial (703) 274-4216.

FIGURE 1. DEMILITARIZATION OF BREECHRING AND SLIDING BREECHBLOCK

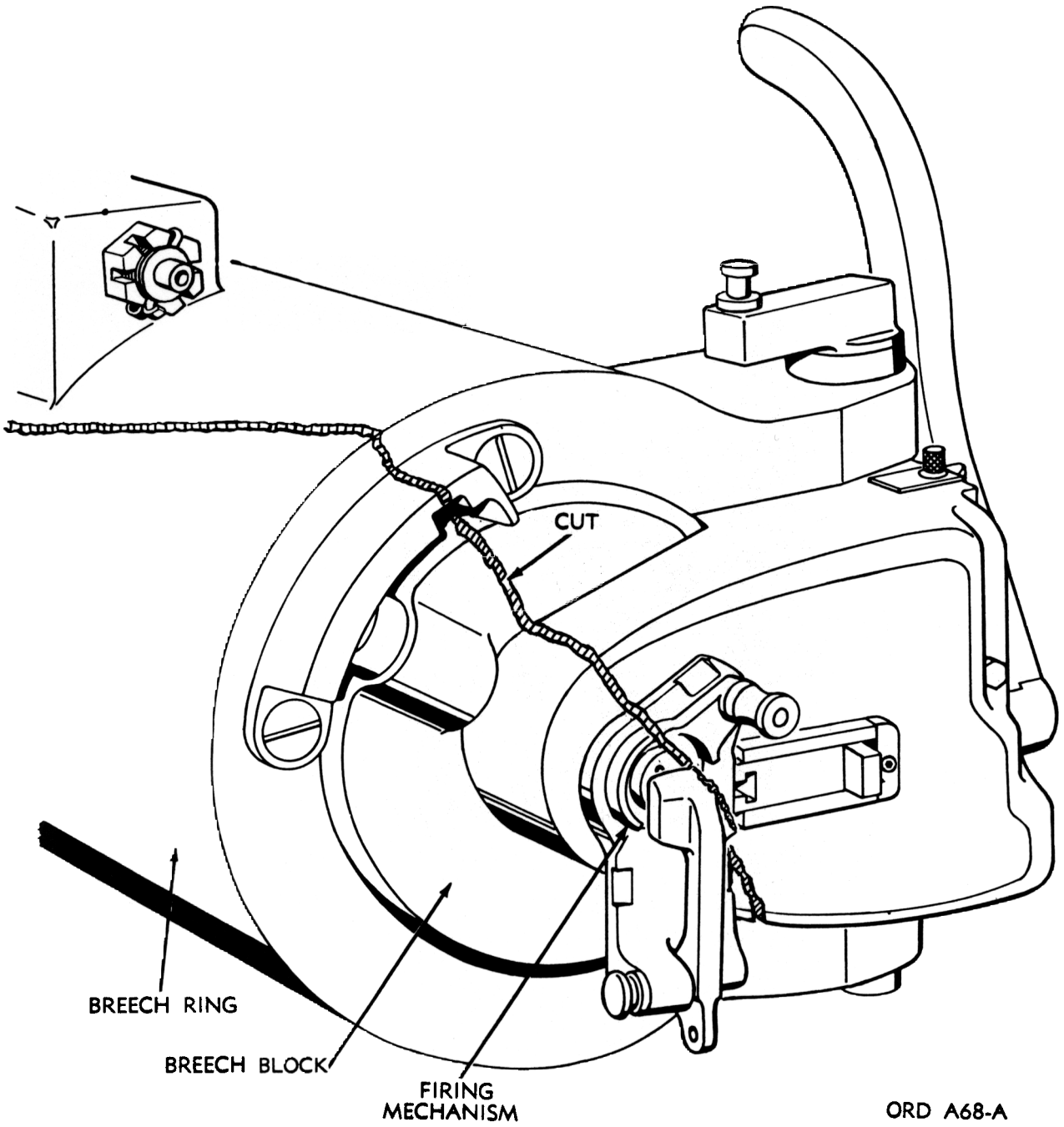

FIGURE 2. DEMILITARIZATION OF INTERRUPTED THREAD BREECHBLOCK

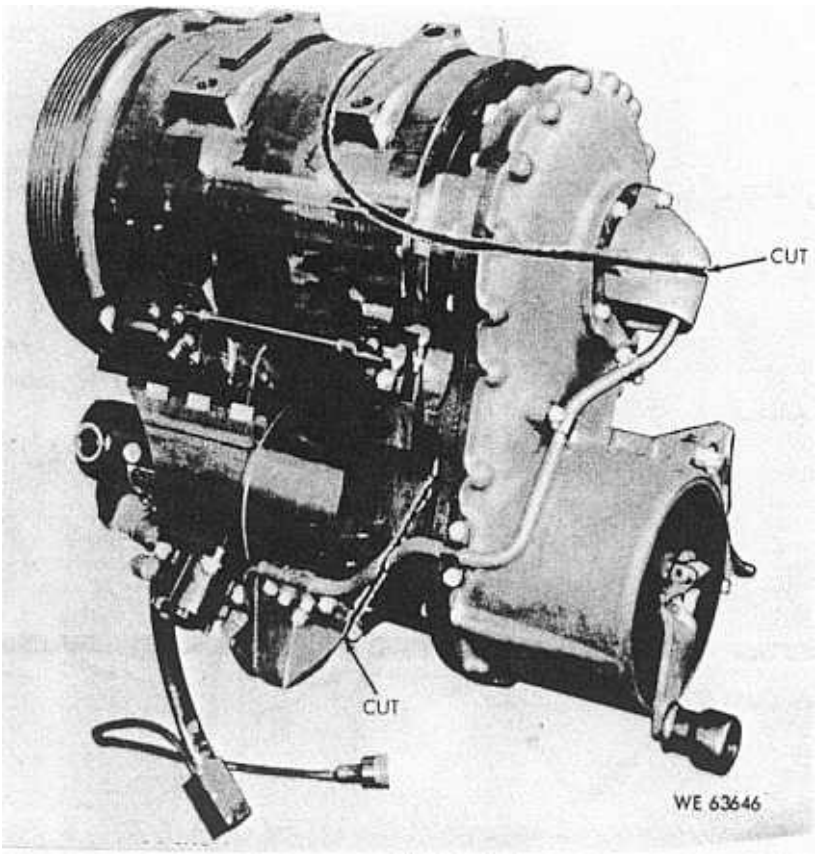

FIGURE 3. DEMILITARIZATION OF LINEAR MOVING TYPE INTERRUPTED THREAD BREECHBLOCK CHAMBER

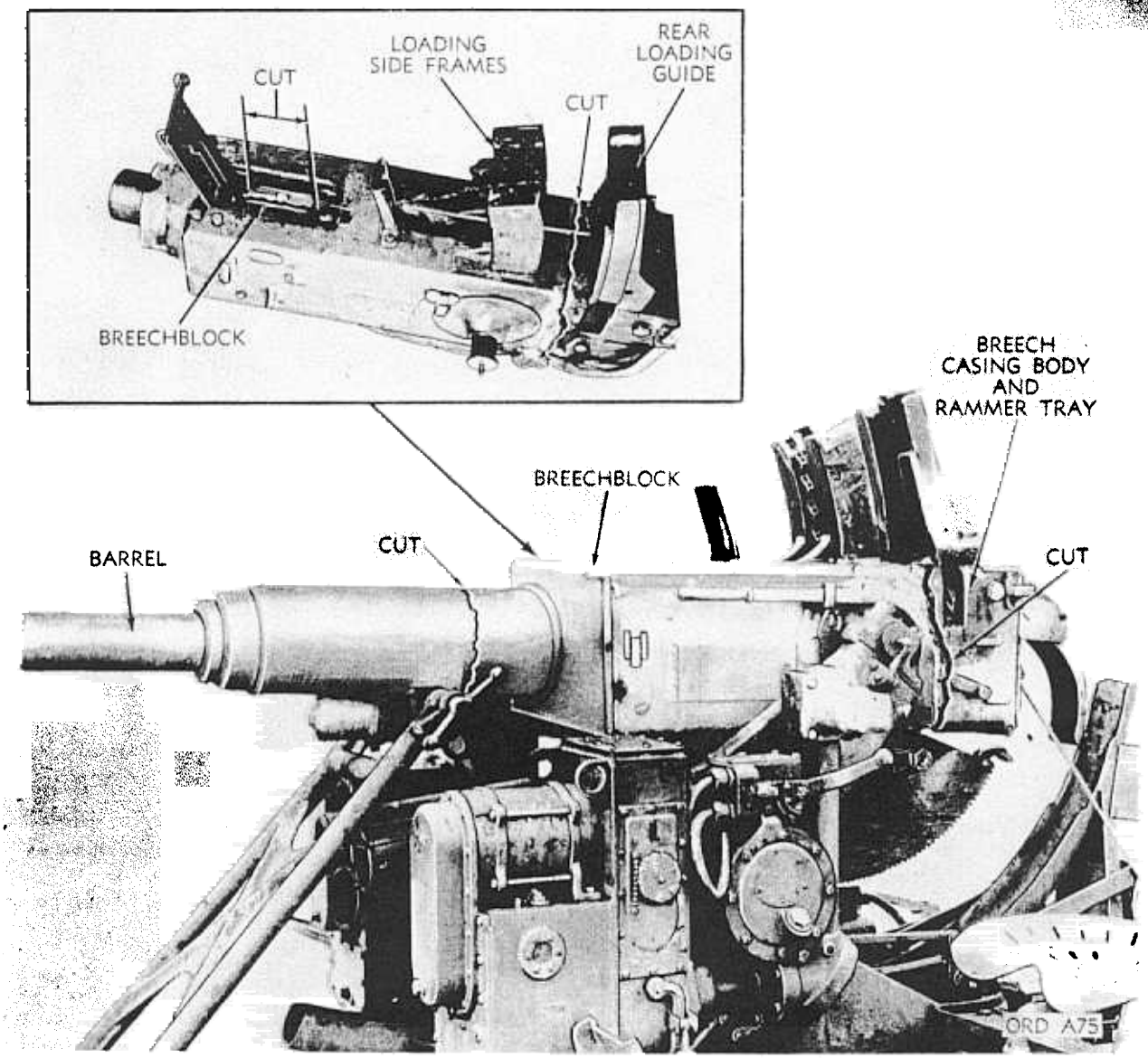

FIGURE 4. DEMILITARIZATION OF 40MM AUTOMATIC GUN

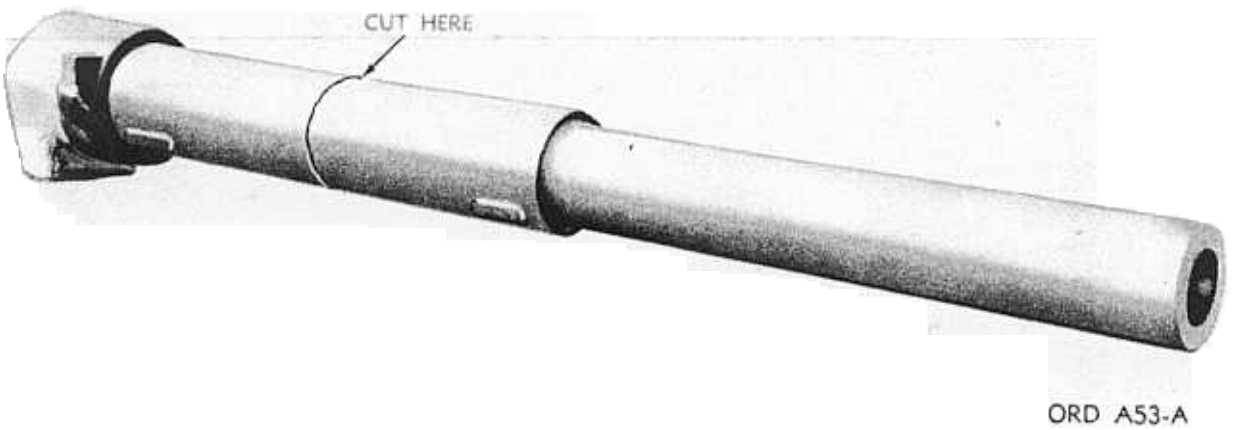

FIGURE 5. LOCATION OF CUT ON ARTILLERY TUBE

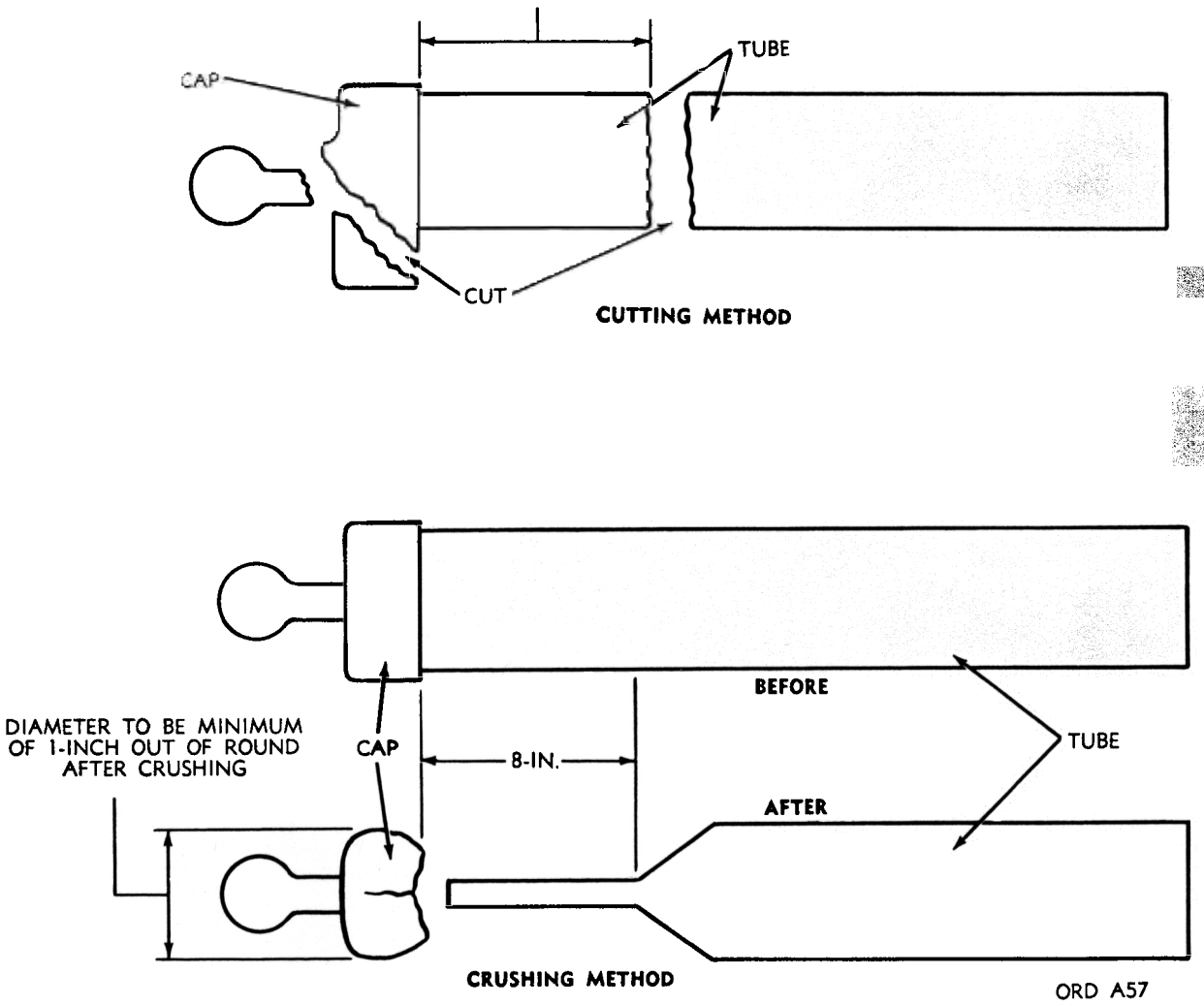

FIGURE 6. DEMILITARIZATION OF MORTAR TUBE BY CUTTING OR CRUSHING

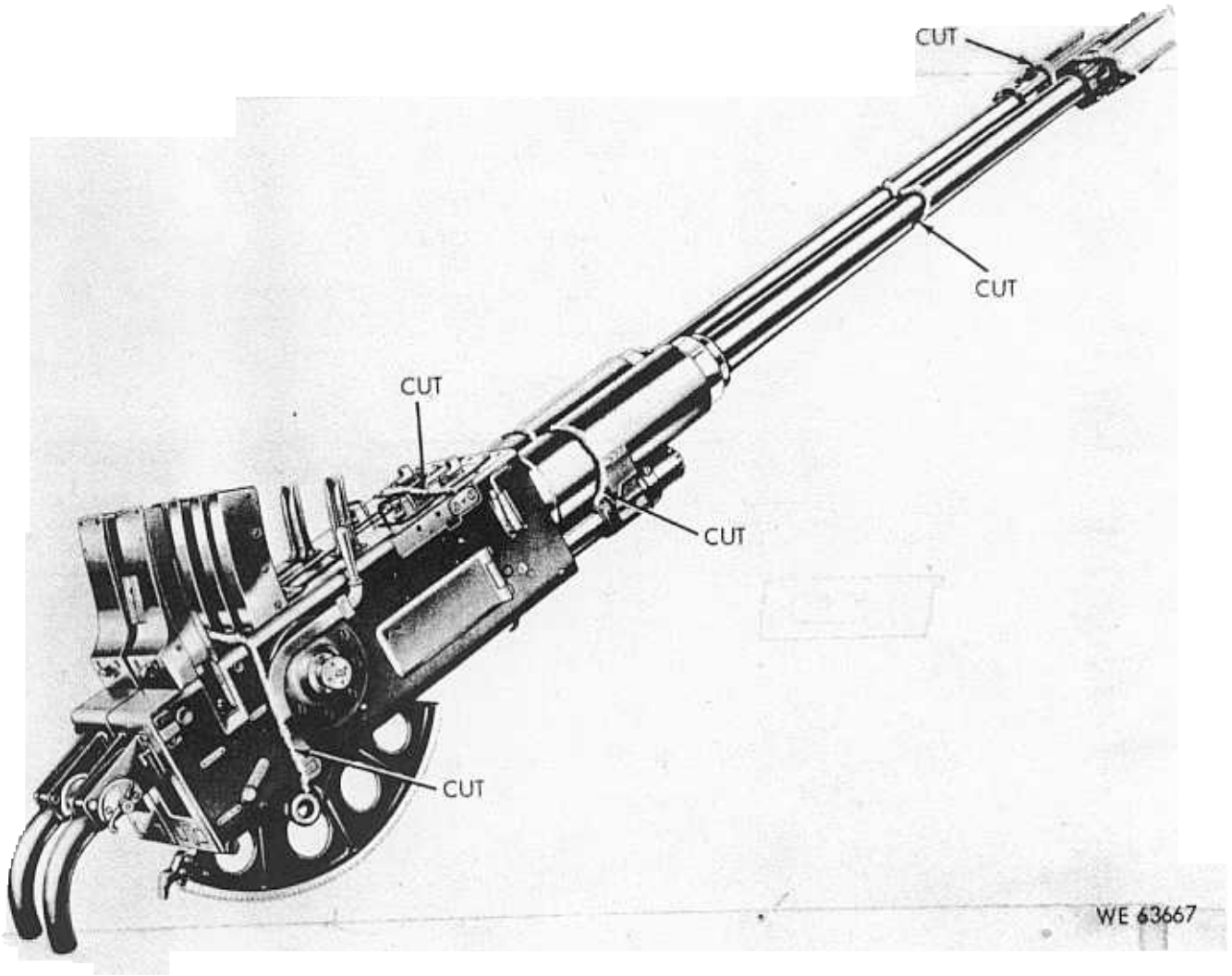

FIGURE 7. DEMILITARIZATION OF TWIN 40MM M42A1 GUN

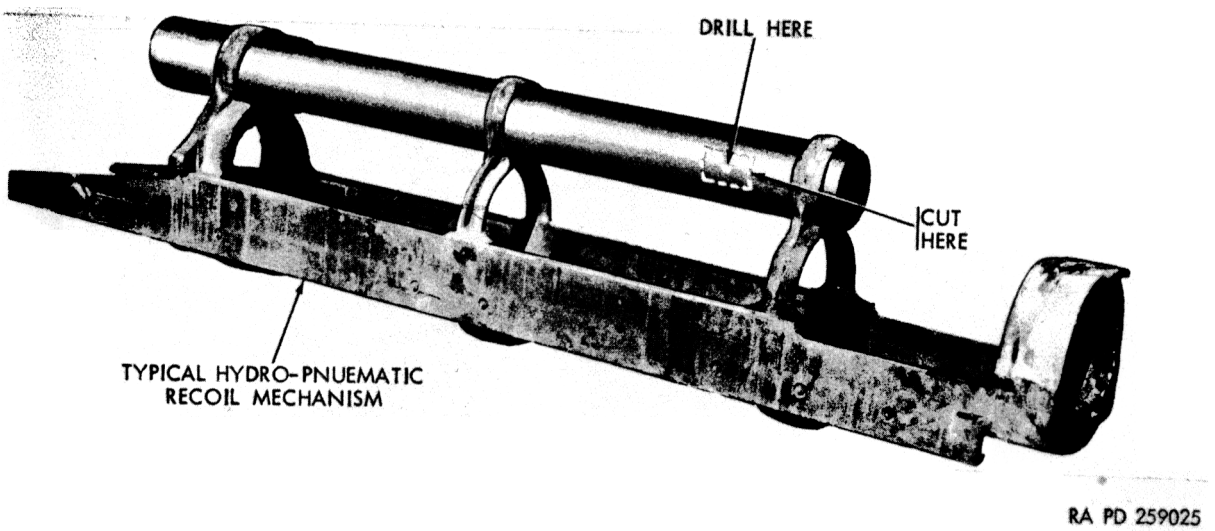

FIGURE 8. LOCATION OF HOLES IN HYDROPNEUMATIC RECOIL MECHANISM

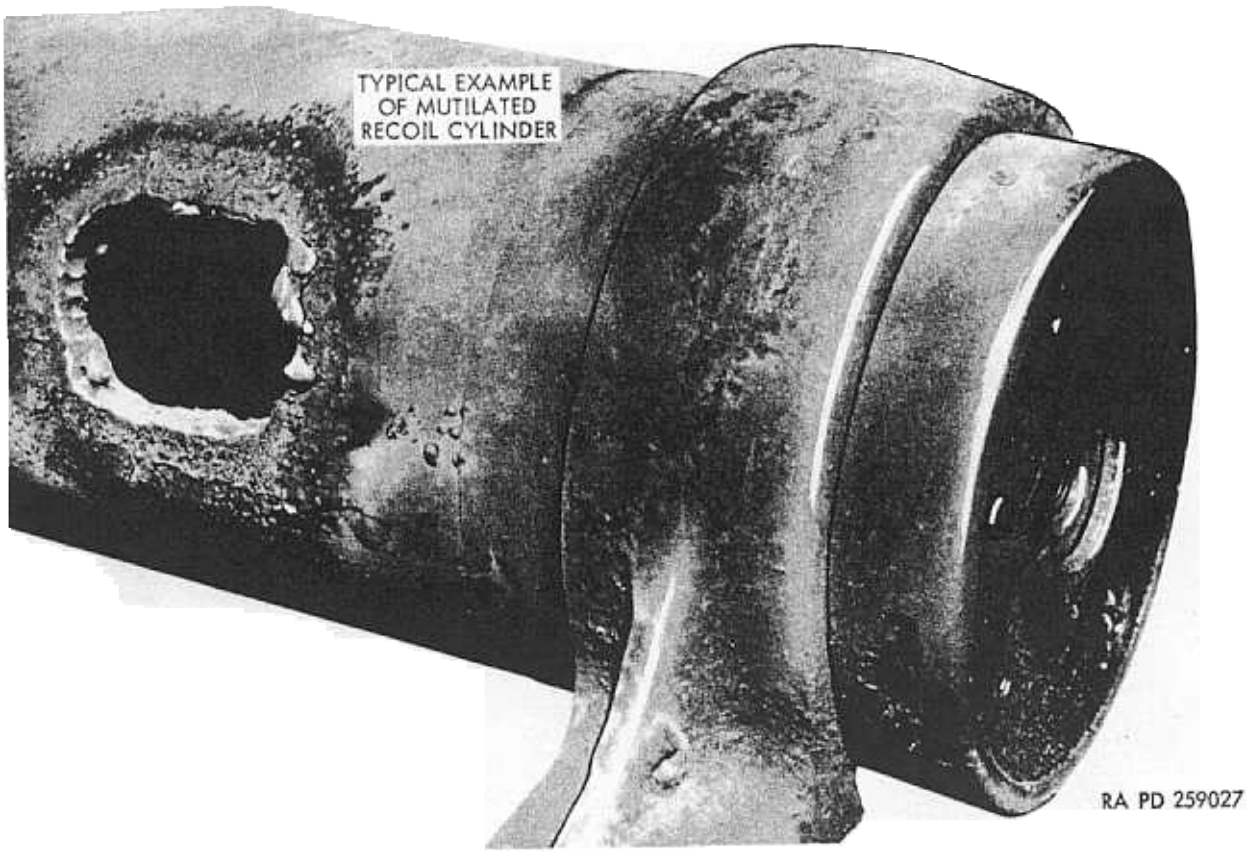

FIGURE 9. A TWO-SQUARE-INCH HOLE CUT BY TORCH IN NITROGEN CYLINDER

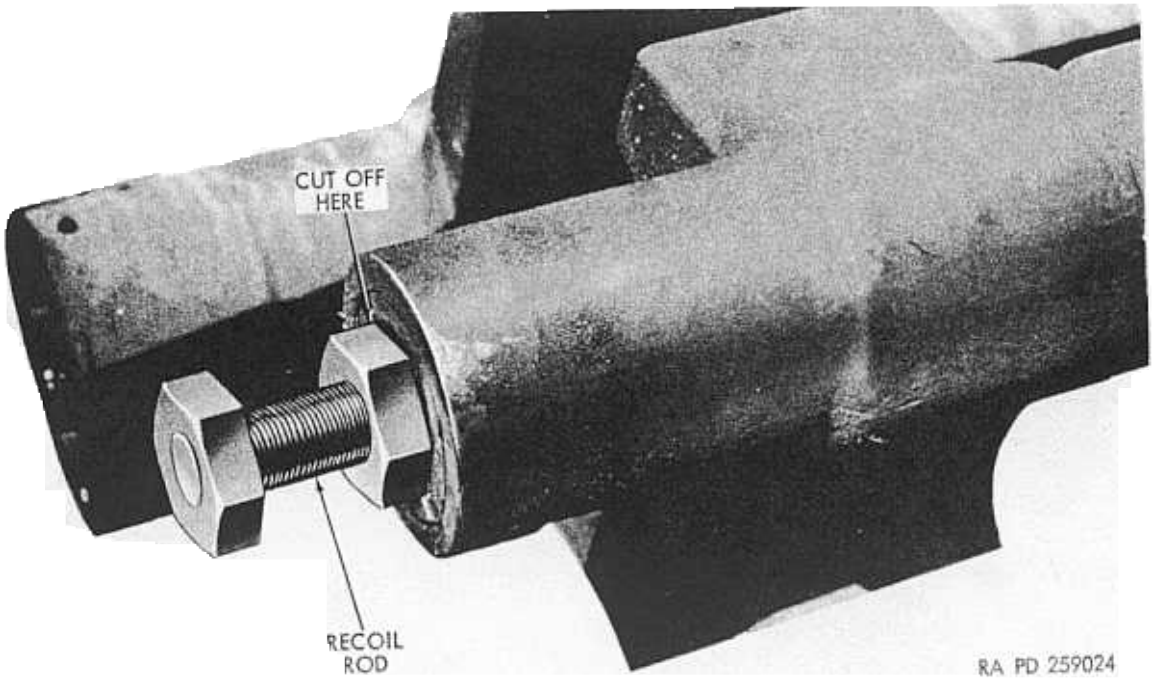

FIGURE 10. DEMILITARIZATION OF RECOIL ROD

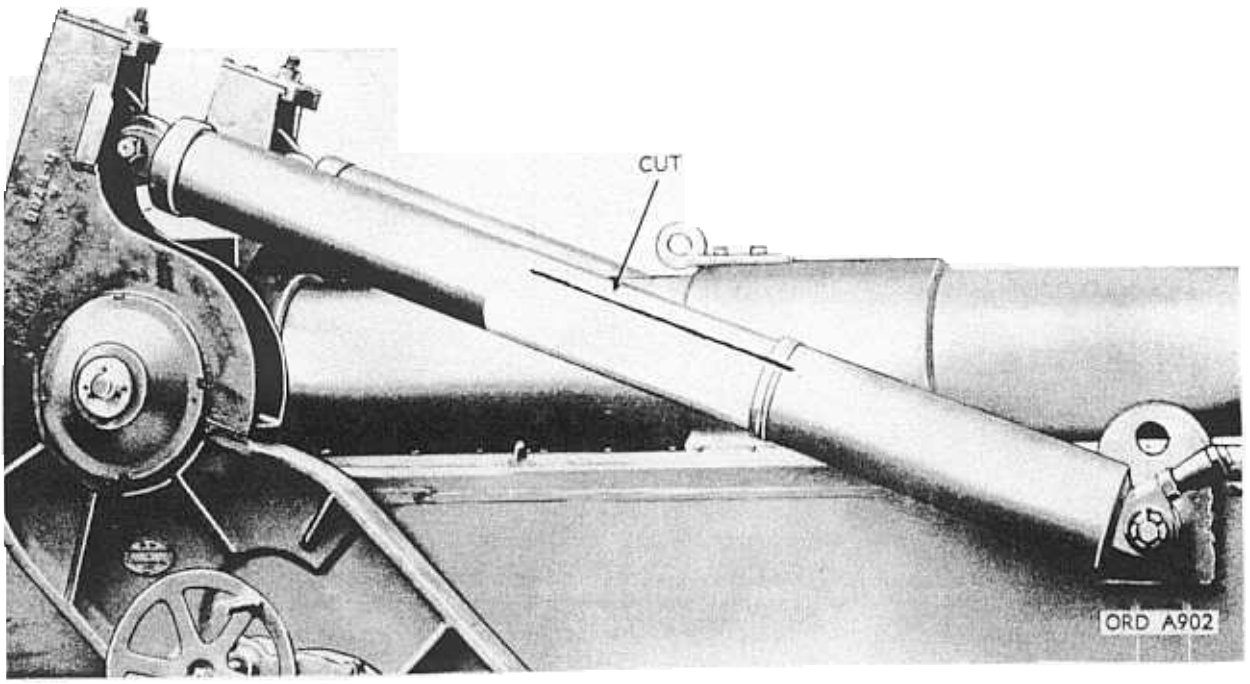

FIGURE 11. DEMILITARIZATION OF HYDROPNEUMATIC EQUILIBRATOR

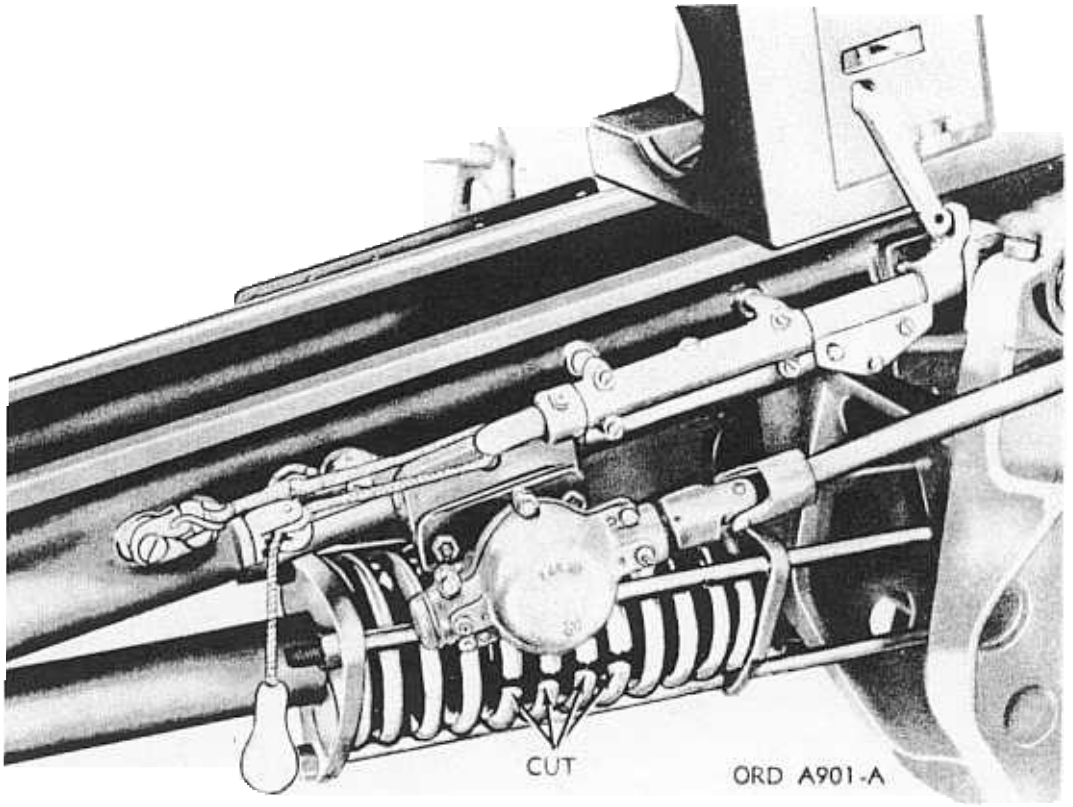

FIGURE 12. DEMILITARIZATION OF SPRING-TYPE EQUILIBRATOR ON 105MM HOWITZER M2 SERIES

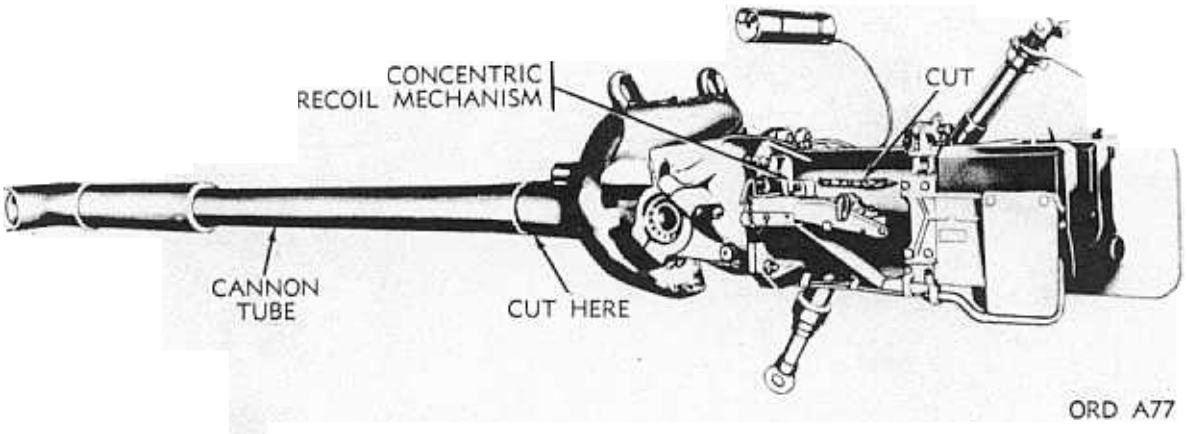

FIGURE 13. DEMILITARIZATION OF CONCENTRIC RECOIL MECHANISM-TYPE CANNON

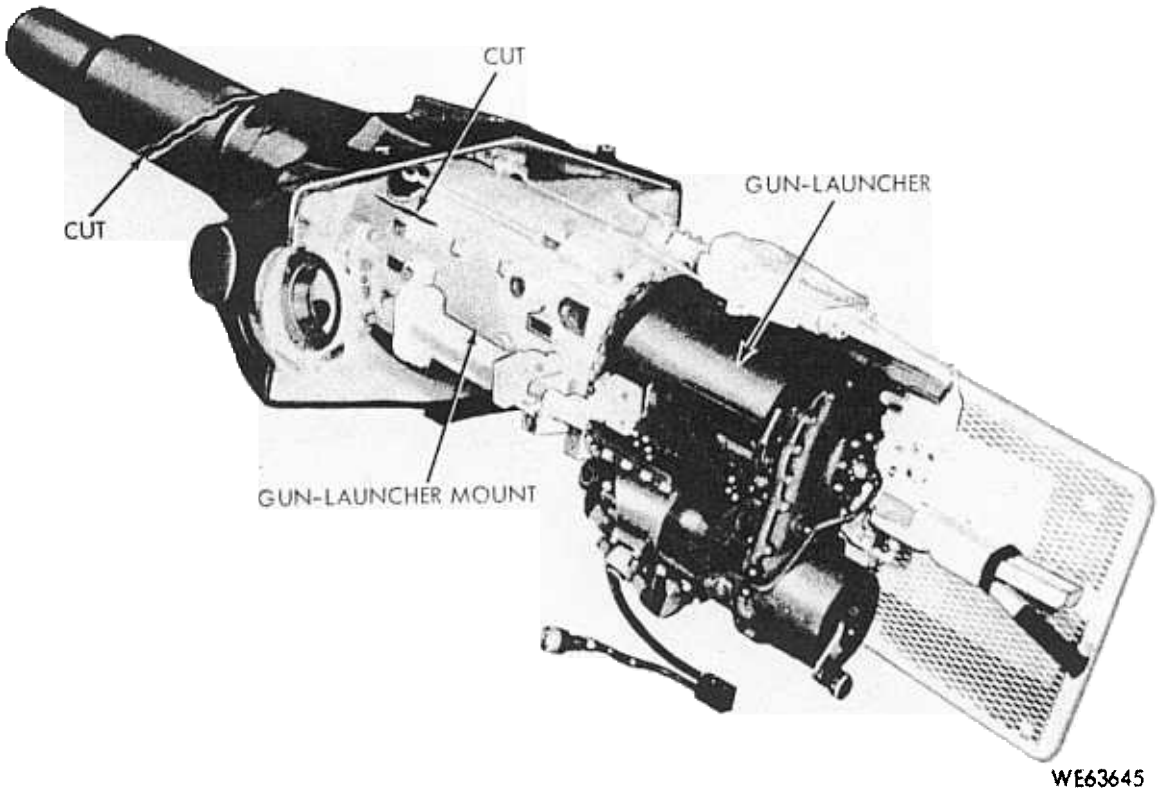

FIGURE 14. DEMILITARIZATION OF CONCENTRIC RECOIL MECHANISM-TYPE GUN LAUNCHER

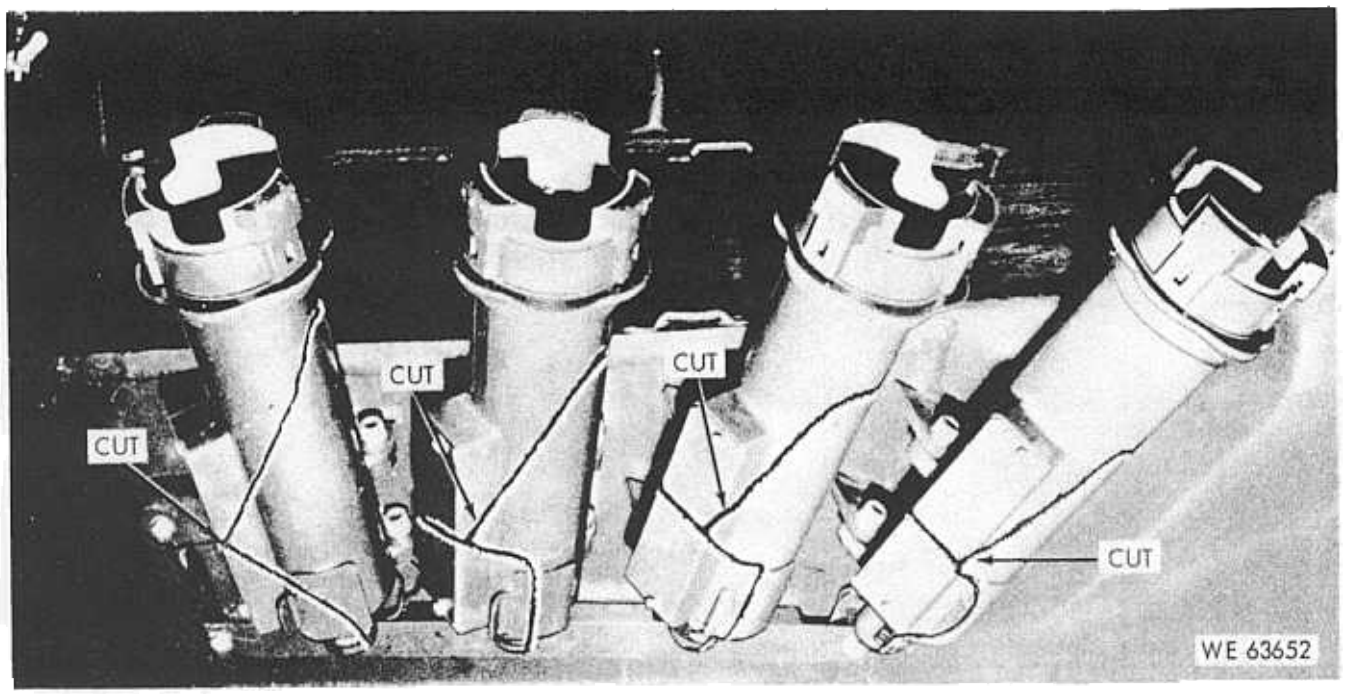

FIGURE 15. DEMILITARIZATION OF GRENADE PROJECTOR MOUNTS

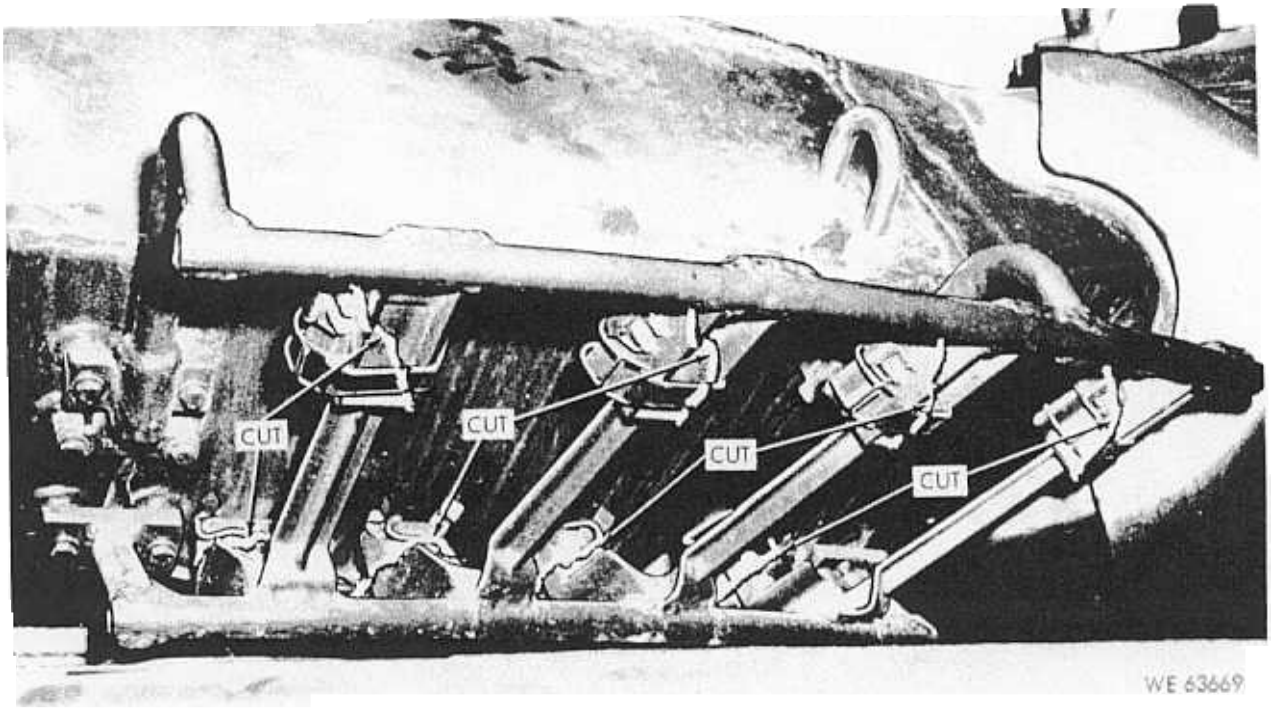

FIGURE 16. DEMILITARIZATION OF GRENADE PROJECTOR MOUNTS

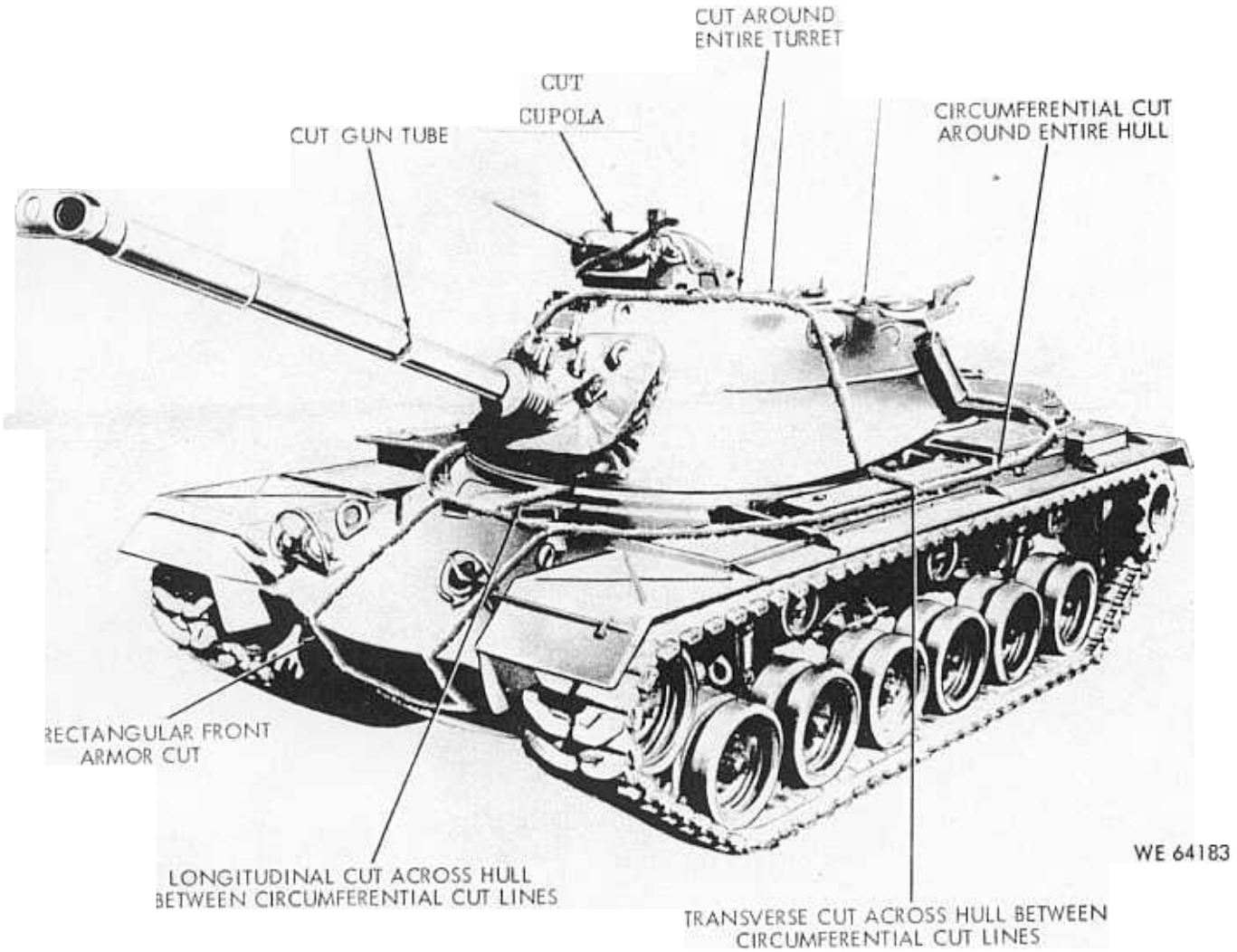

FIGURE 17. DEMILITARIZATION OF TANKS BY CUTTING

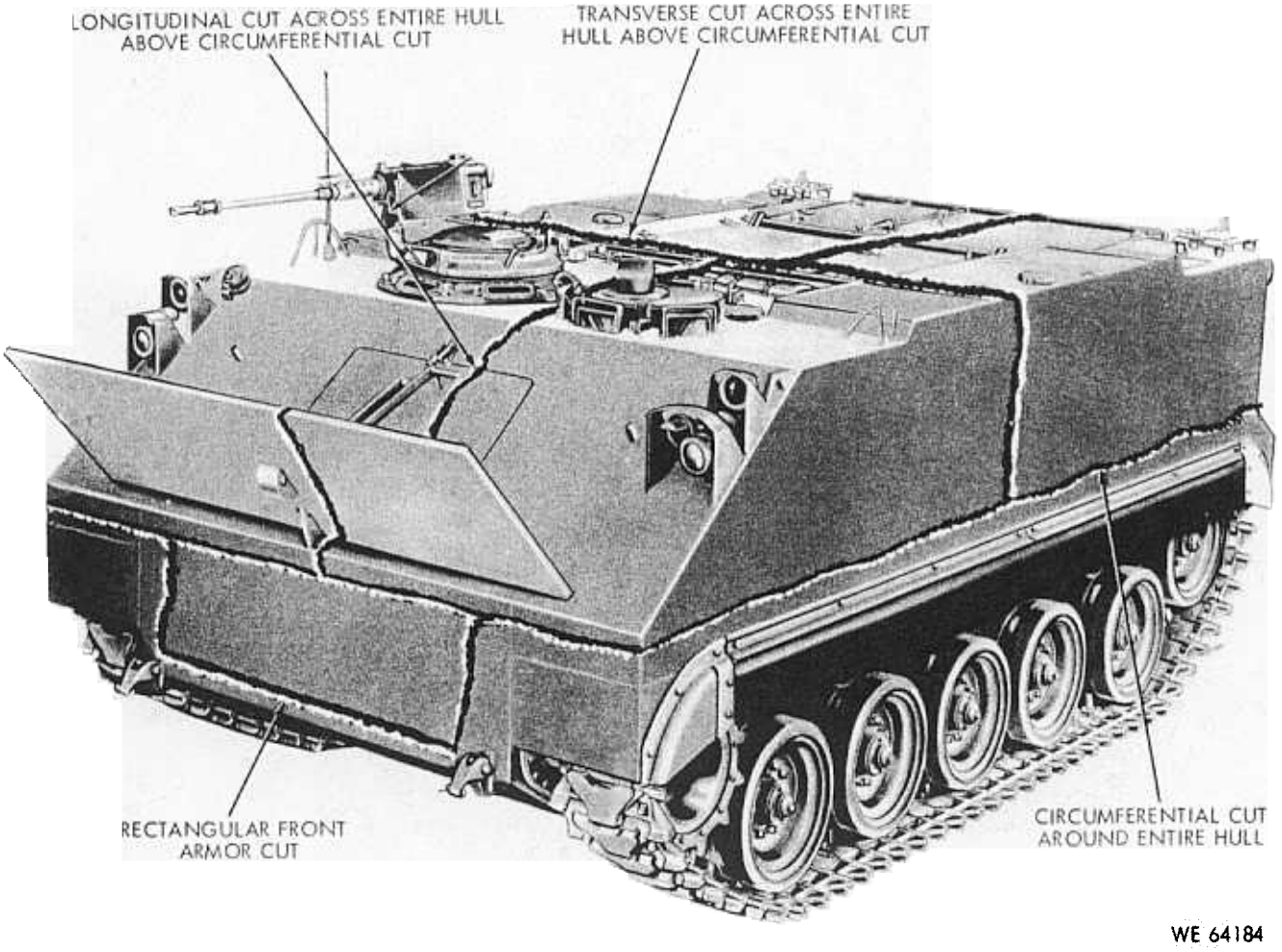

FIGURE 18. DEMILITARIZATION OF PERSONNEL CARRIERS BY CUTTING

FIGURE 19. DEMILITARIZATION OF TANK RECOVERY VEHICLES BY CUTTING

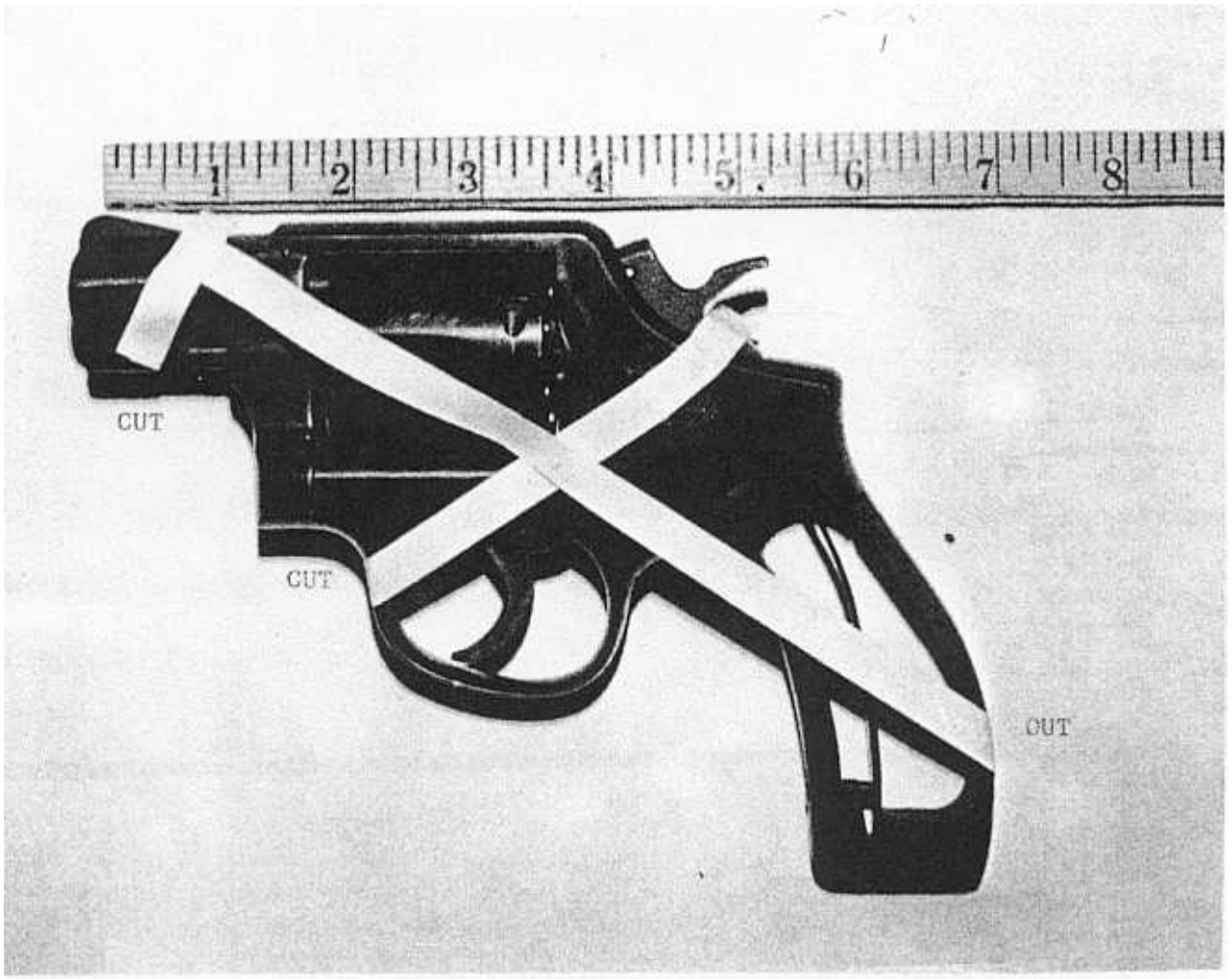

FIGURE 20. DEMILITARIZATION OF A REVOLVER

Demilitarization of revolvers will be accomplished by three or four different cuts depending on the length of the barrel. With the revolver laying on its right side, the cylinder in a closed position and the grips removed, the following cuts will be made. Each cut must displace at least one-half inch of metal if demilitarization is accomplished by torch cutting:

1. The first cut must begin behind the hammer extension, cutting toward the left at a 45 degree angle through the lower cylinder and the front portion of the trigger guard.

2. The second cut must begin in front of where the barrel screws into the revolver frame, cutting toward the right at a 45 degree angle through the cylinder and the handle. Ensure that the hammer back spring is cut.

3. The third cut must begin at the same point as the second cut continuing to the left at a 45 degree angle through the barrel and cylinder shaft.

NOTE: Revolvers with 4 inch or longer barrels will require one additional cut to accomplish required demilitarization. The cut will be in the center of the barrel at a 45 degree angle to the left.

FIGURE 21. DEMILITARIZATION OF .45 CALIBER AUTOMATIC PISTOL AND SIMILAR WEAPONS

Demilitarization of the .45 caliber automatic pistol and similar weapons will be accomplished by three different cuts. The grips will be removed from the weapon before the demilitarization begins. With the slide in the closed position and the weapon laying on its left side, the following cuts will be made. Each cut must displace one-half inch of metal if demilitarization is accomplished by torch cutting:

1. The first cut will begin 2 inches from the butt of the pistol (not including the hammer), cutting downward to the left through the grip safety.

2. The second cut will begin at the chamber, cutting downward to the left through the trigger and the magazine receiver.

3. The third cut will begin 2 inches from the tip of the barrel, cutting at a 45 degree angle to the right through the barrel and the frame.

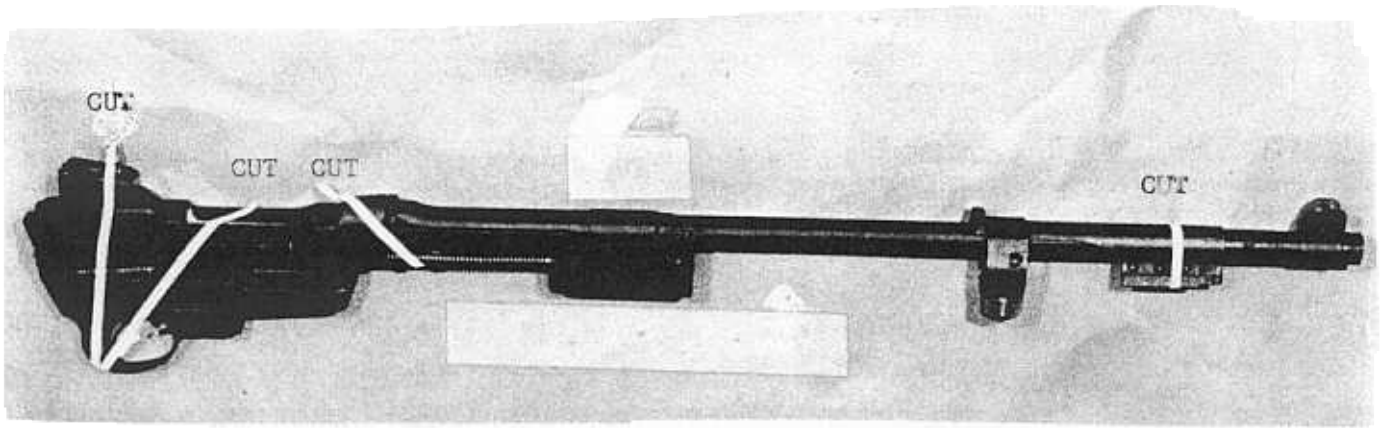

FIGURE 22. DEMILITARIZATION OF .30 CALIBER M1 CARBINE

Demilitarization of the .30 caliber M1 carbine will be accomplished by four different cuts. The stock and handguard will be removed before demilitarization begins. With the weapon laying on its left side, the bolt closed, the following cuts will be made. Each cut must displace at least one-half inch of metal if demilitarization is accomplished by torch cutting:

1. The first cut will be made through the rear sight, receiver and the rear of the trigger guard.

2. The second cut will be made halfway between the rear sight mount and the barrel chamber, cutting downward to the left through the trigger guard, ensuring that the bolt and both sides of the frame are completely severed (cut apart).

3. The third cut will begin 1 inch back from the front of the receiver, cutting downward to the right through the barrel chamber, operating slide, guide, and spring.

4. The fourth cut will begin toward the front of the barrel, cutting through the barrel and center of the bayonet lug.

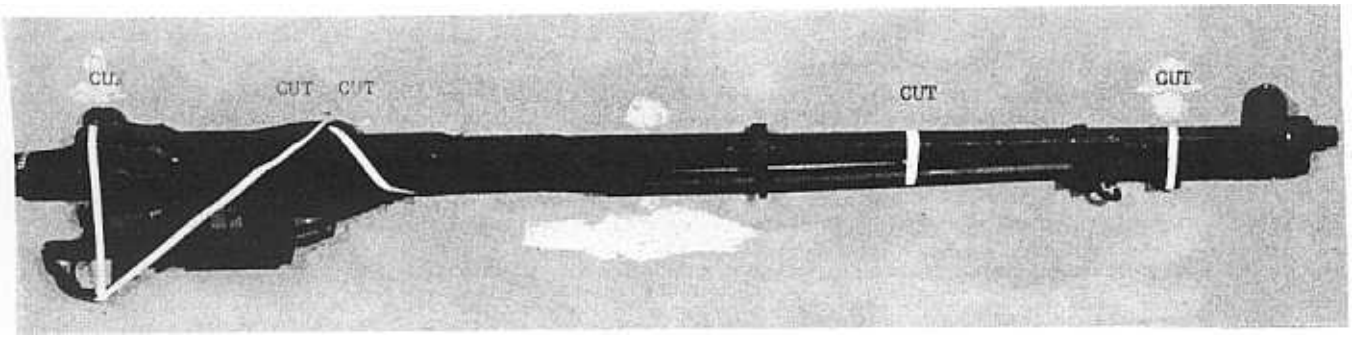

FIGURE 23. DEMILITARIZATION OF THE .30 CALIBER M1 RIFLE

Demilitarization of the .30 caliber M1 rifle will be accomplished by five different cuts. The stock and handguard will be removed before demilitarization begins. With the weapon laying on its left side, the bolt closed, and the trigger group inserted, the following cuts will be made. Each cut must displace at least one-half inch of metal if demilitarization is accomplished by torch cutting:

1. The first cut will be made downward through the rear sight, receiver and center of the trigger guard.

2. The second cut will be made 1 inch back from the front of the receiver, cutting downward to the left at a 45 degree angle through the bolt and the front of the trigger guard.

3. The third cut will begin 1 inch back from the front of the receiver, cutting downward to the right at a 45 degree angle through the barrel chamber.

4. The fourth cut will be made 5 inches in front of the lower, front handguard band, cutting through the barrel and operating rod.

5. The fifth cut will be made toward the front of the barrel, cutting downward through the barrel and center of the gas cylinder.

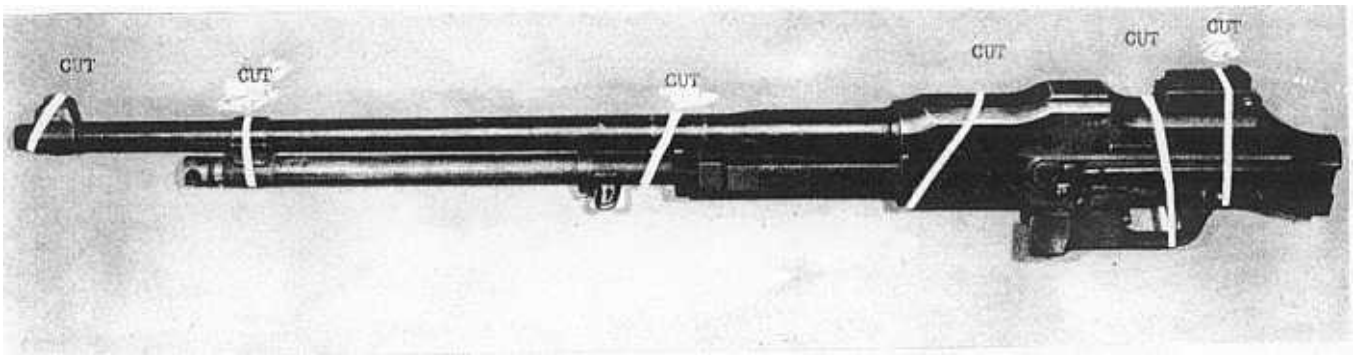

FIGURE 24. DEMILITARIZATION OF THE .30 CALIBER BROWNING AUTOMATIC RIFLE, M1918A2

Demilitarization of the .30 caliber Browning Automatic Rifle (BAR), M1918A2, will be accomplished by six different cuts. The stock assembly and fore end will be removed before demilitarization begins. With the weapon laying on its right side, the bolt closed, the following cuts will be made. Each cut must displace at least one-half inch of metal if demilitarization is accomplished by torch cutting:

1. The first cut will begin in the middle of the rear sight, cutting downward through the rear of the trigger guard.

2. The second cut will begin in front of the rear sight, cutting downward through the bolt and the middle of the trigger guard.

3. The third cut will begin 2 inches back from the front of the receiver, cutting downward to the left at a 45 degree angle through the barrel chamber and the rear of the gas cylinder.

4. The fourth cut will begin 8 inches to the front of the receiver, cutting downward to the left at a 45 degree angle through the barrel, gas cylinder, and piston assembly.

5. The fifth cut will begin at the front barrel bracket, cutting downward through the barrel bracket and gas cylinder piston assembly.

6. The sixth cut will be at a 45 degree angle to the left, beginning at the rear of the front sight through the sight mount and barrel.

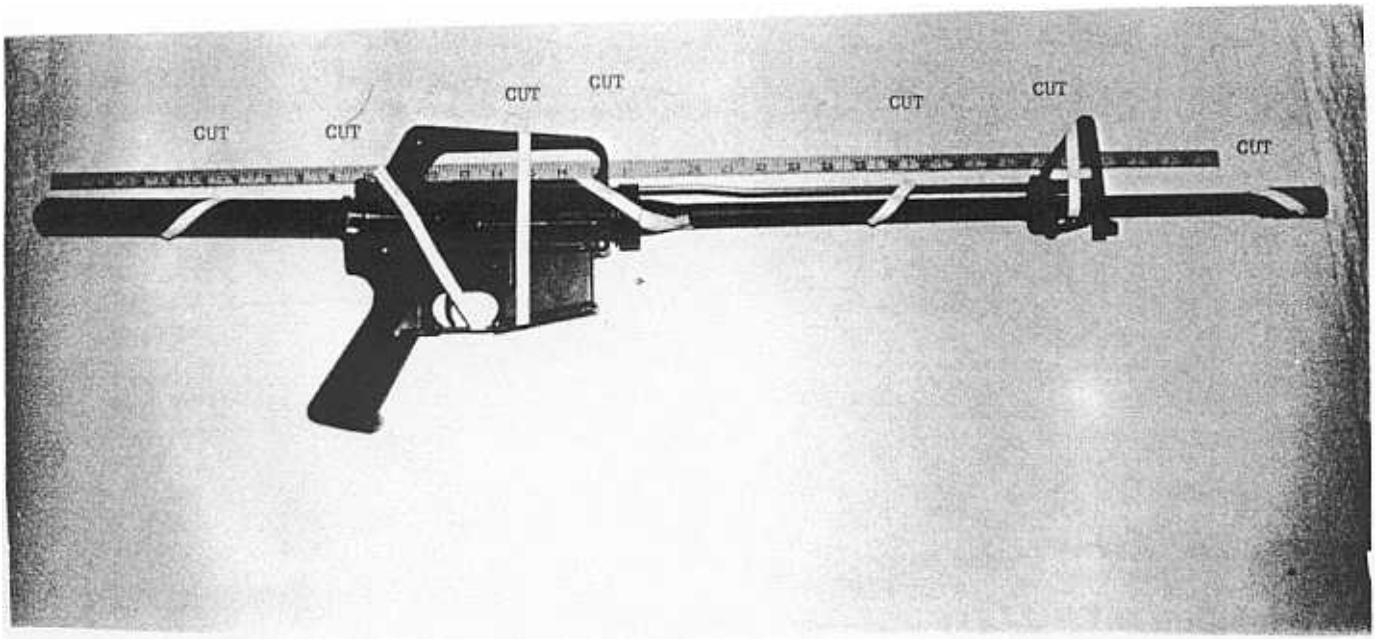

FIGURE 25. DEMILITARIZATION OF THE M16 RIFLE

Demilitarization of the M16 rifle will be accomplished by seven different cuts. The stock and handguards (forearm) will be removed before demilitarization begins. With the weapon laying on its left side, the bolt closed and the lower receiver inserted, the following cuts will be made. Each cut must displace at least one-half inch of metal if demilitarization is accomplished by torch cutting:

1. The first cut will begin 5 inches from the left end of the weapon through the recoil cylinder and recoil spring. This cut will be at a 45 degree angle to the left.

2. The second cut will begin at the rear base of the handle of the upper receiver continuing downward through the front of the trigger guard.

3. The third cut will be made straight from the center of the handle of the upper receiver, down through the lower receiver and the point one-half inch from the rear of the magazine retainer in the lower receiver.

4. The fourth cut will begin one-half inch from front of handle of the upper receiver through the chamber, the barrel retainer nut and the area where the chamber swell returns to the normal size of the barrel.

5. The fifth cut will be made halfway between the receiver and the sight holding device. The cut will be made through the barrel and the gas check tube. This cut is to be at a 45 degree angle to the left.

6. The sixth cut will be made straight through from top to bottom of the sight holder including gas check tube.

7. The seventh cut will begin at the tip of the barrel cutting upward to the left at a 45 degree angle.

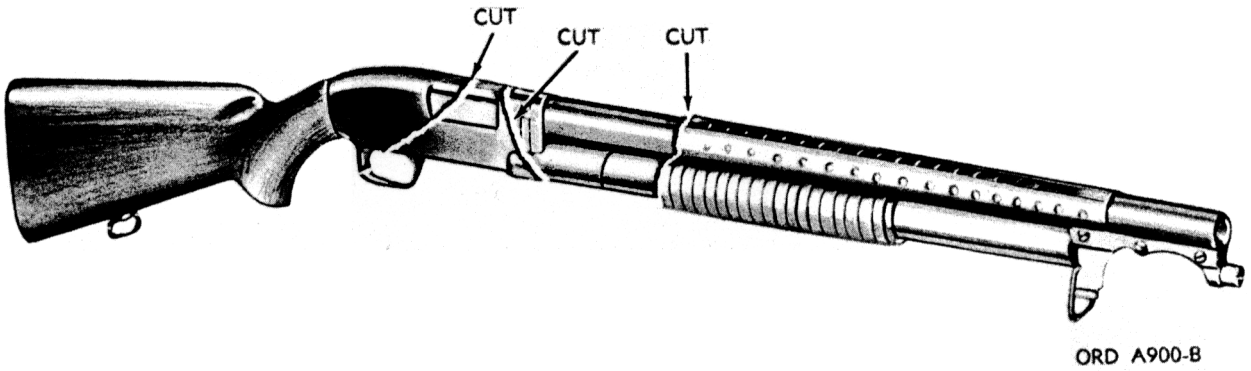

FIGURE 26. DEMILITARIZATION OF 12 GAGE RIOT TYPE SHOTGUNS

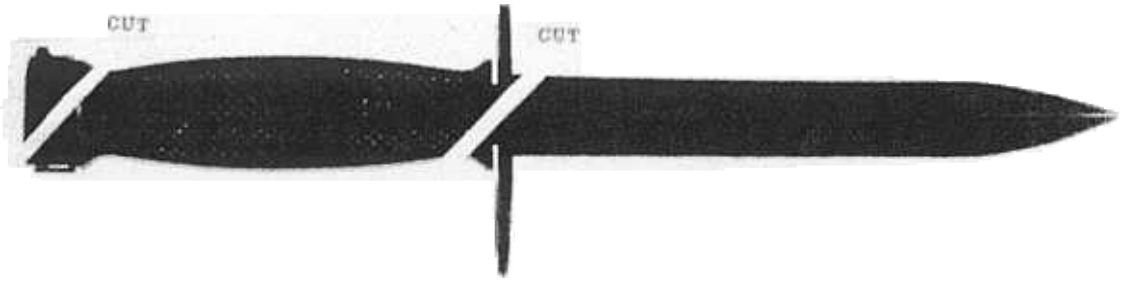

FIGURE 27. DEMILITARIZATION OF BAYONET KNIFE

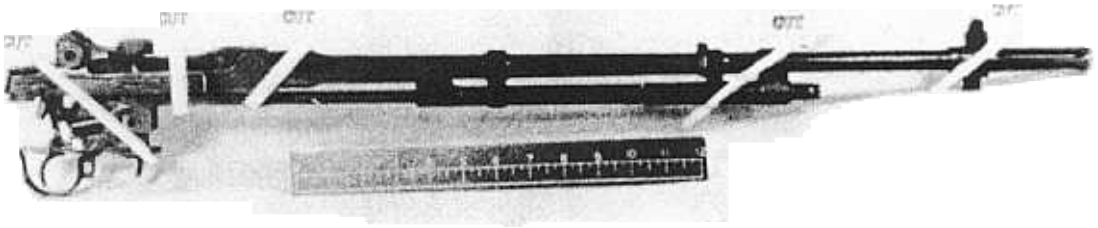

FIGURE 28. DEMILITARIZATION OF THE M14 RIFLE

The demilitarization of the M14 rifle will be accomplished by five different cuts. The stock and forearm will be removed before demilitarization begins. With the weapon laying on its left side, the bolt closed, and the trigger group inserted, the following cuts will be made. Each cut must displace at least one-half inch of metal if demilitarization is accomplished by torch cutting:

1. The first cut will begin just in front of the serial number, cutting downward to the right through the right tip end of the trigger group.

2. The second cut will be made halfway between the rear-sight mount and chamber ensuring that the bolt and both sides of the frame are completely severed (cut apart).

3. The third cut will begin on the barrel 1-1/2 inches in front of the chamber, cutting to the left through the chamber and the rear of the gas spring rod pin.

4. The fourth cut will begin toward the front of the barrel where the gas check rod clamps to the barrel, cutting to the left through the gas check rod and the bottom of the rear clamp.

5. The fifth cut will be at a 45 degree angle to the left, beginning in front of the front sight cutting through the entire sight mount.

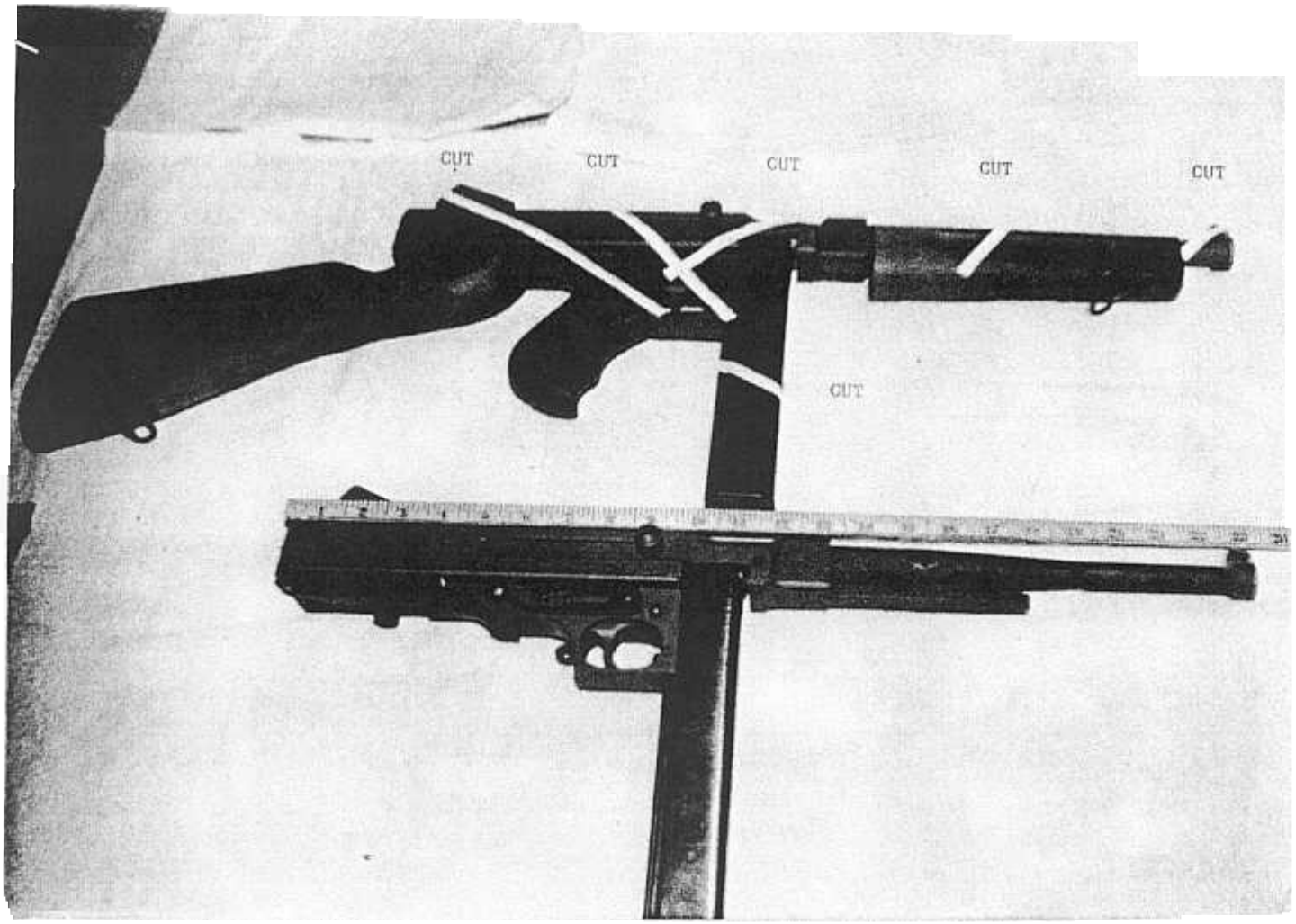

FIGURE 29. DEMILITARIZATION OF THOMPSON SUBMACHINE GUN

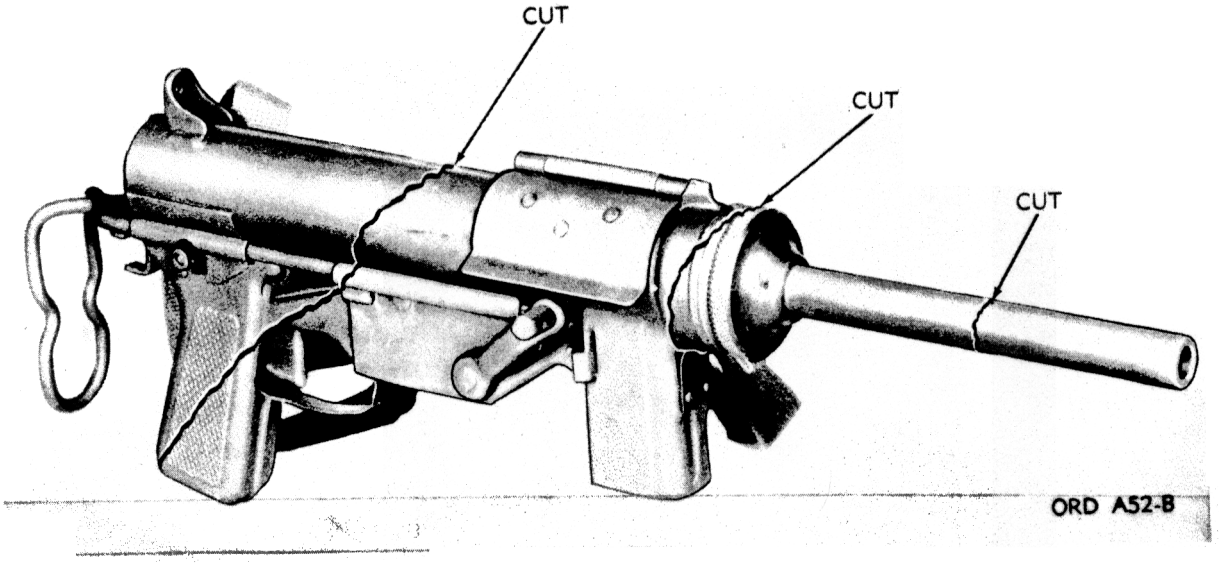

FIGURE 30. DEMILITARIZATION OF CAL. .45 M3 SERIES SUBMACHINE GUN

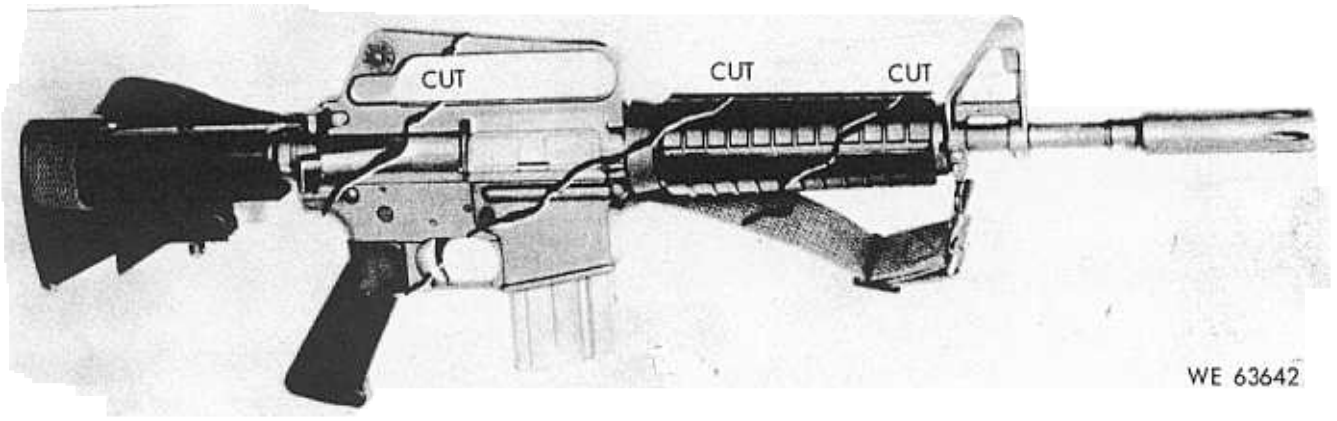

FIGURE 31. DEMILITARIZATION OF 5.56MM SUBMACHINE GUN, XM77E2

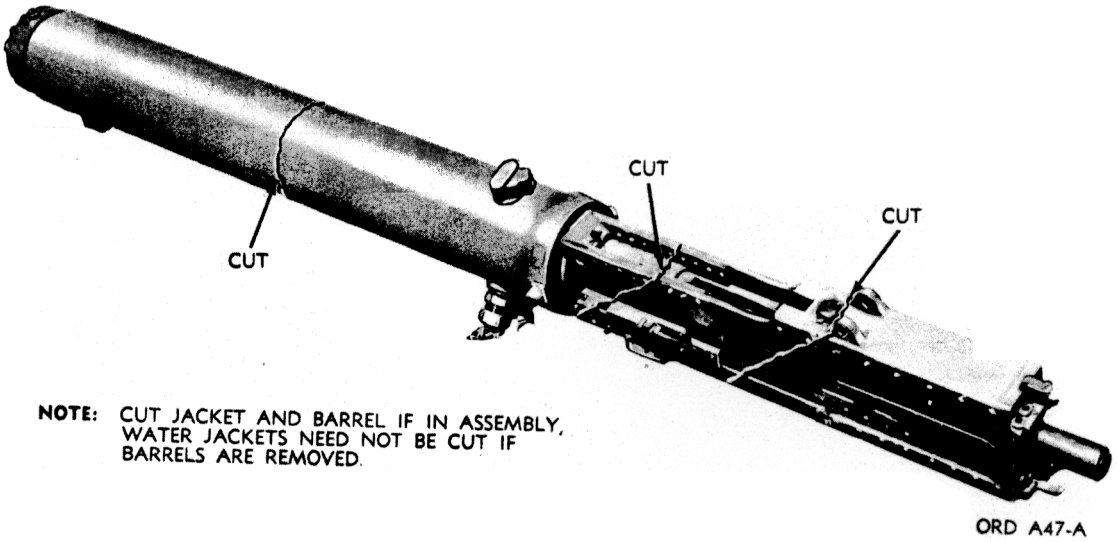

FIGURE 32. DEMILITARIZATION OF CAL. .30/.50 BROWNING WATERCOOLED MACHINE GUN

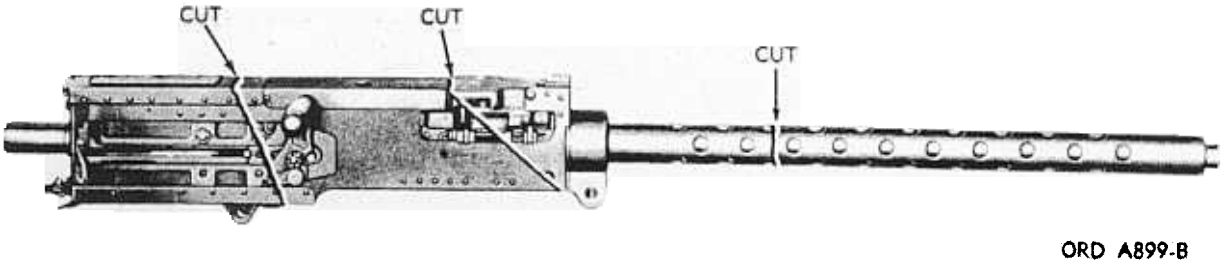

FIGURE 33. DEMILITARIZATION OF CAL. .30 BROWNING MACHINE GUN (ALL SERIES)

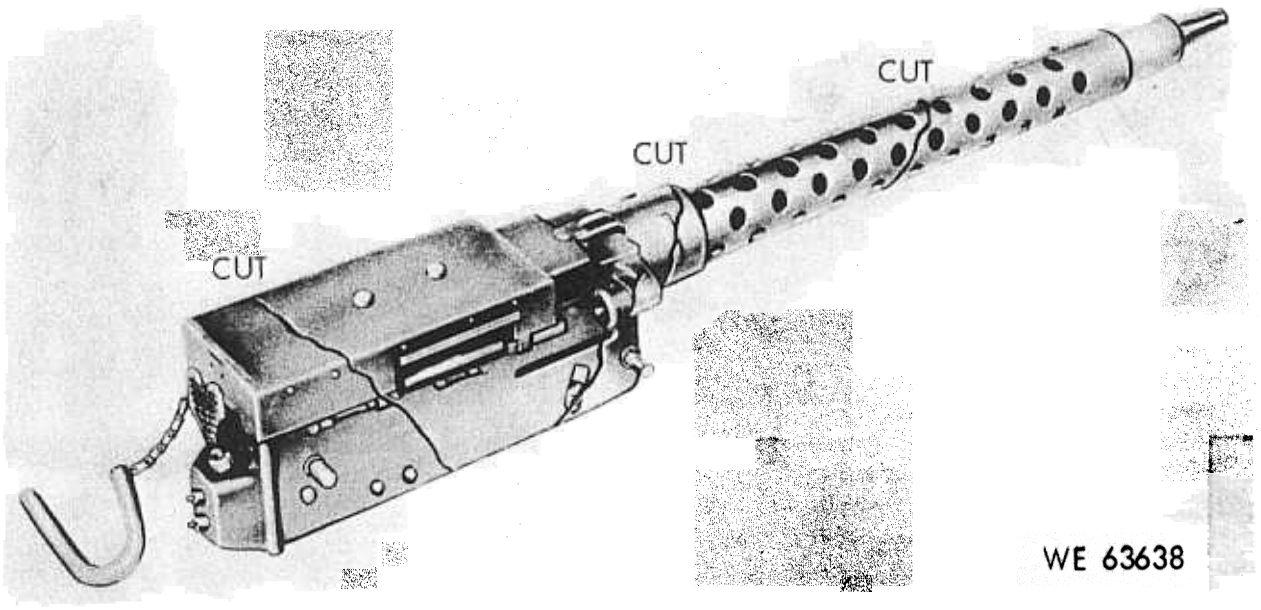

FIGURE 34. DEMILITARIZATION OF 7.62MM, M73, AND M73E1 MACHINE GUNS

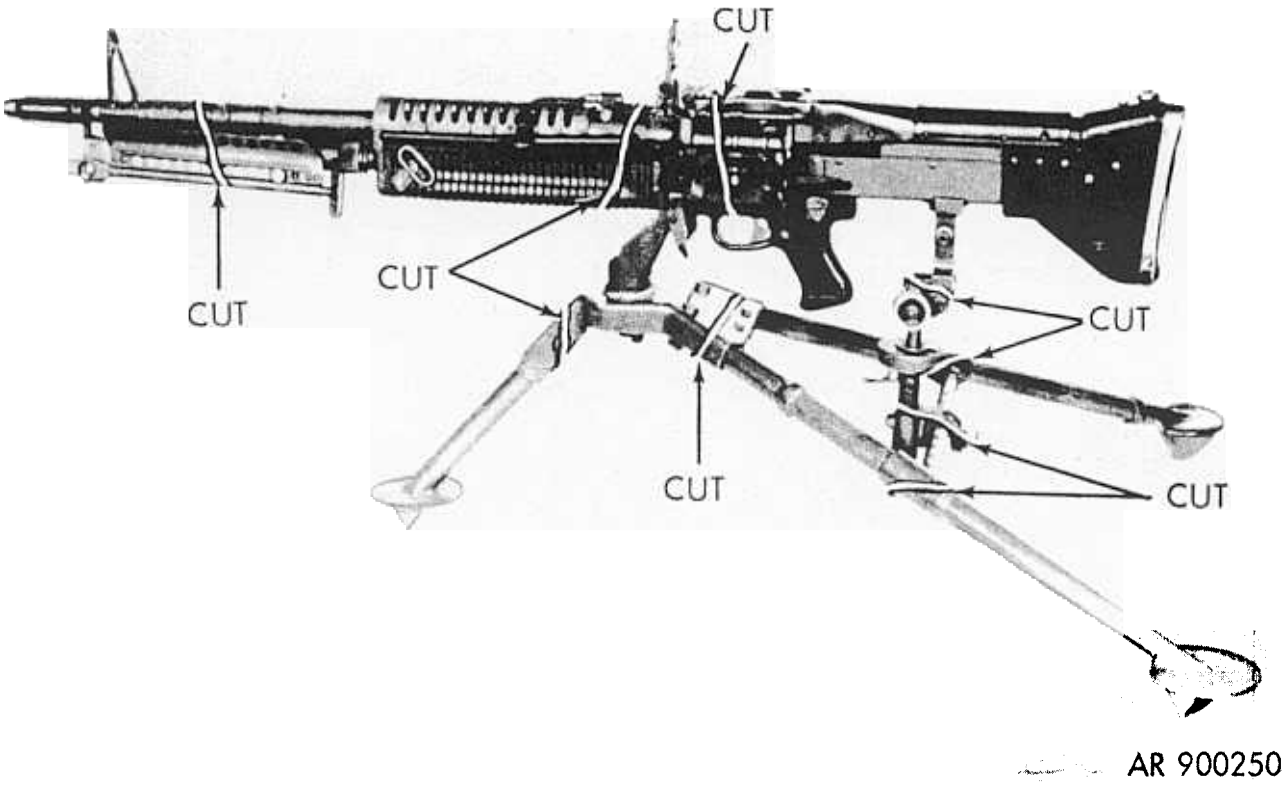

FIGURE 35. DEMILITARIZATION OF 7.62MM M60 SERIES MACHINE GUNS

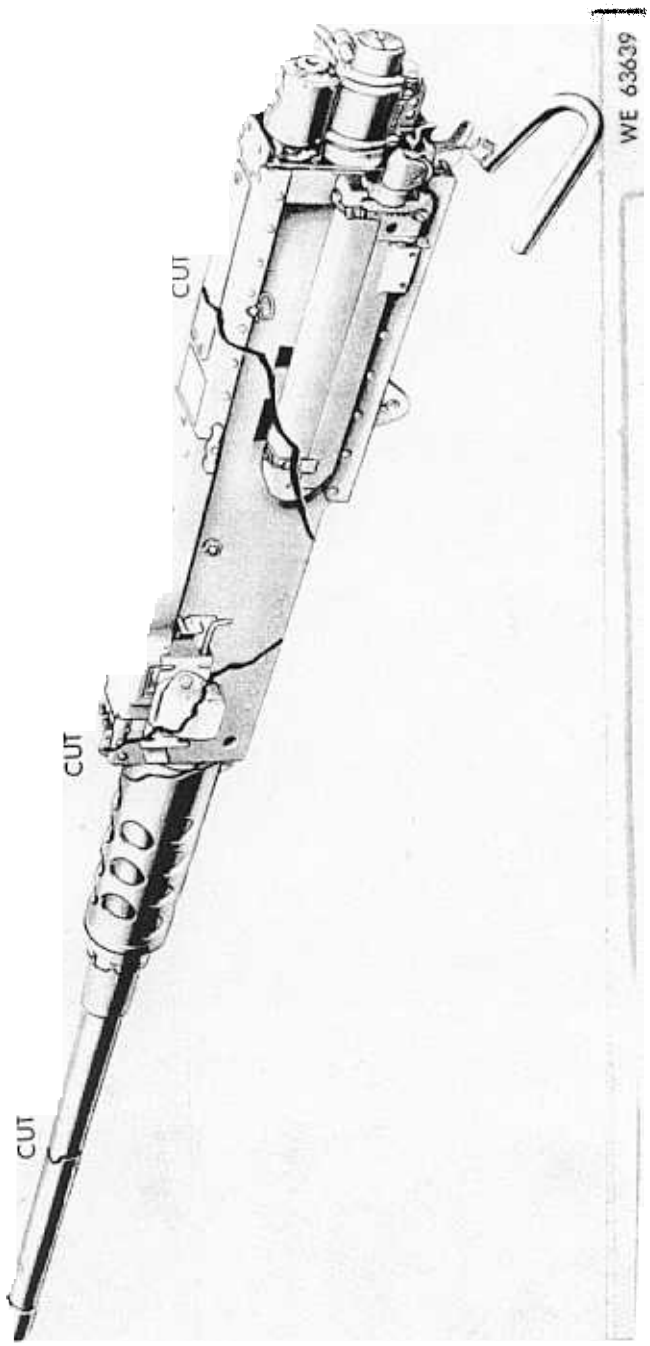

FIGURE 36. DEMILITARIZATION OF CAL. .50 M2 MACHINE GUN

FIGURE 37. DEMILITARIZATION OF CAL. .50 M85 MACHINE GUN

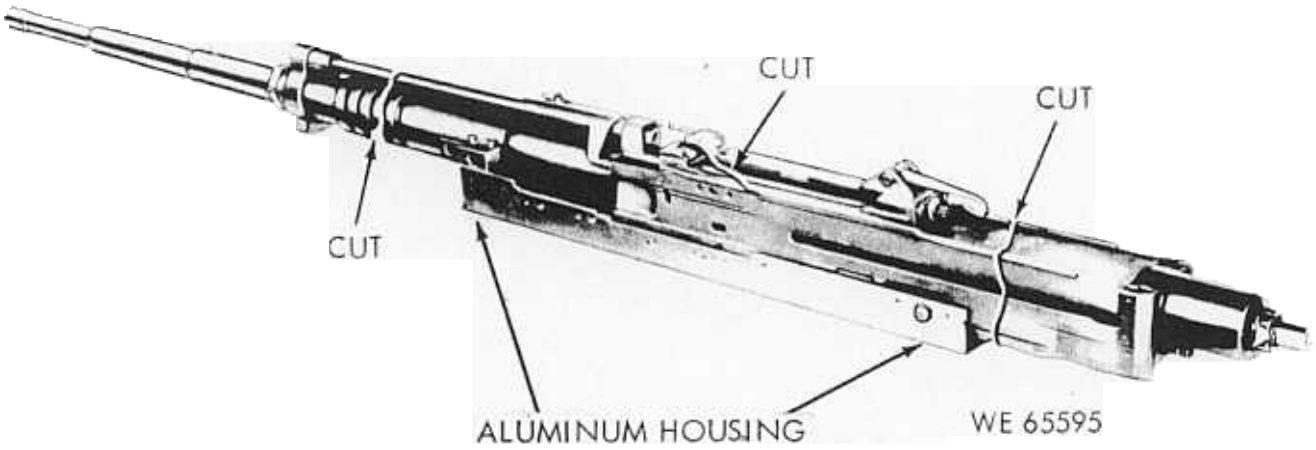

FIGURE 38. DEMILITARIZATION OF 20MM M3 AND M24 SERIES GUNS

FIGURE 1-4. 20-MILLIMETER AUTOMATIC GUN, M139 WITHOUT AUTOMATIC GUN FEEDER AND RECOIL ADAPTER - RIGHT FRONT VIEW.

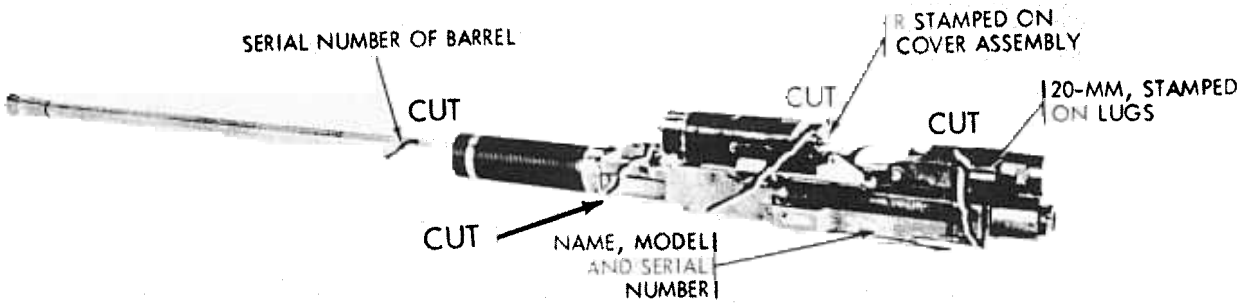

FIGURE 1-5. 20-MILLIMETER AUTOMATIC GUN M139 WITH AUTOMATIC GUN FEEDER, RECOIL ADAPTER, CONTROLS AND IDENTIFICATION MARKINGS - LEFT REAR VIEW. WE 63641

FIGURE 39. DEMILITARIZATION OF 20MM M139 GUN

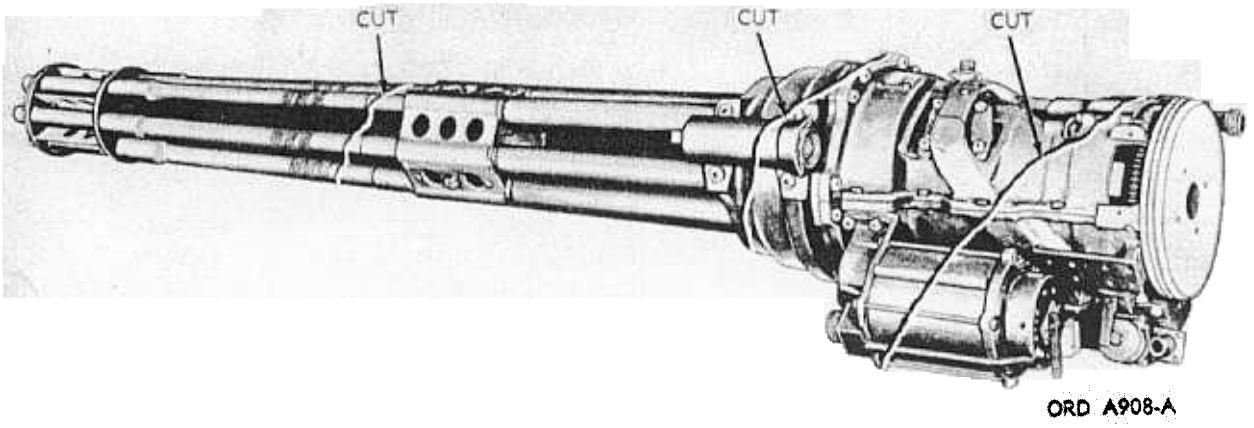

FIGURE 40. DEMILITARIZATION OF 20MM, M61, AND XM168 GUNS

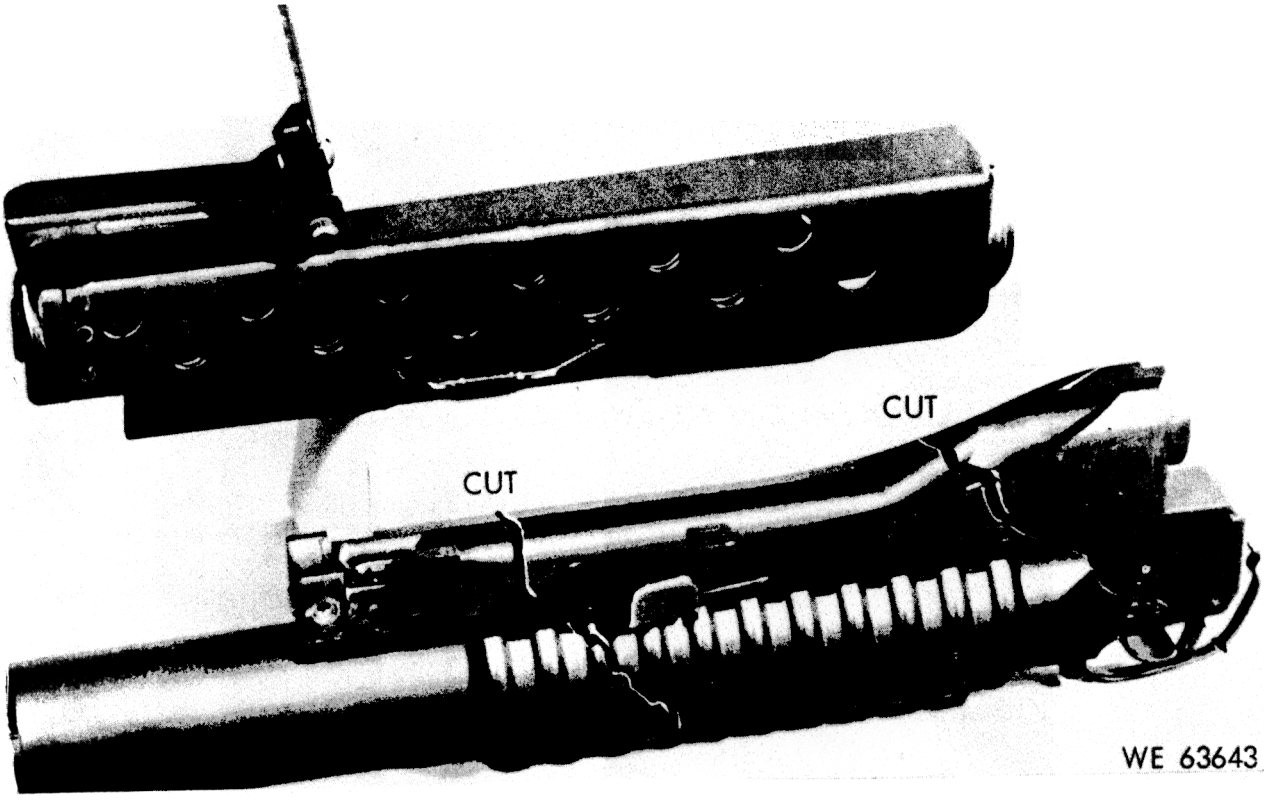

FIGURE 41. LAUNCHER, GRENADE 40MM, XM203

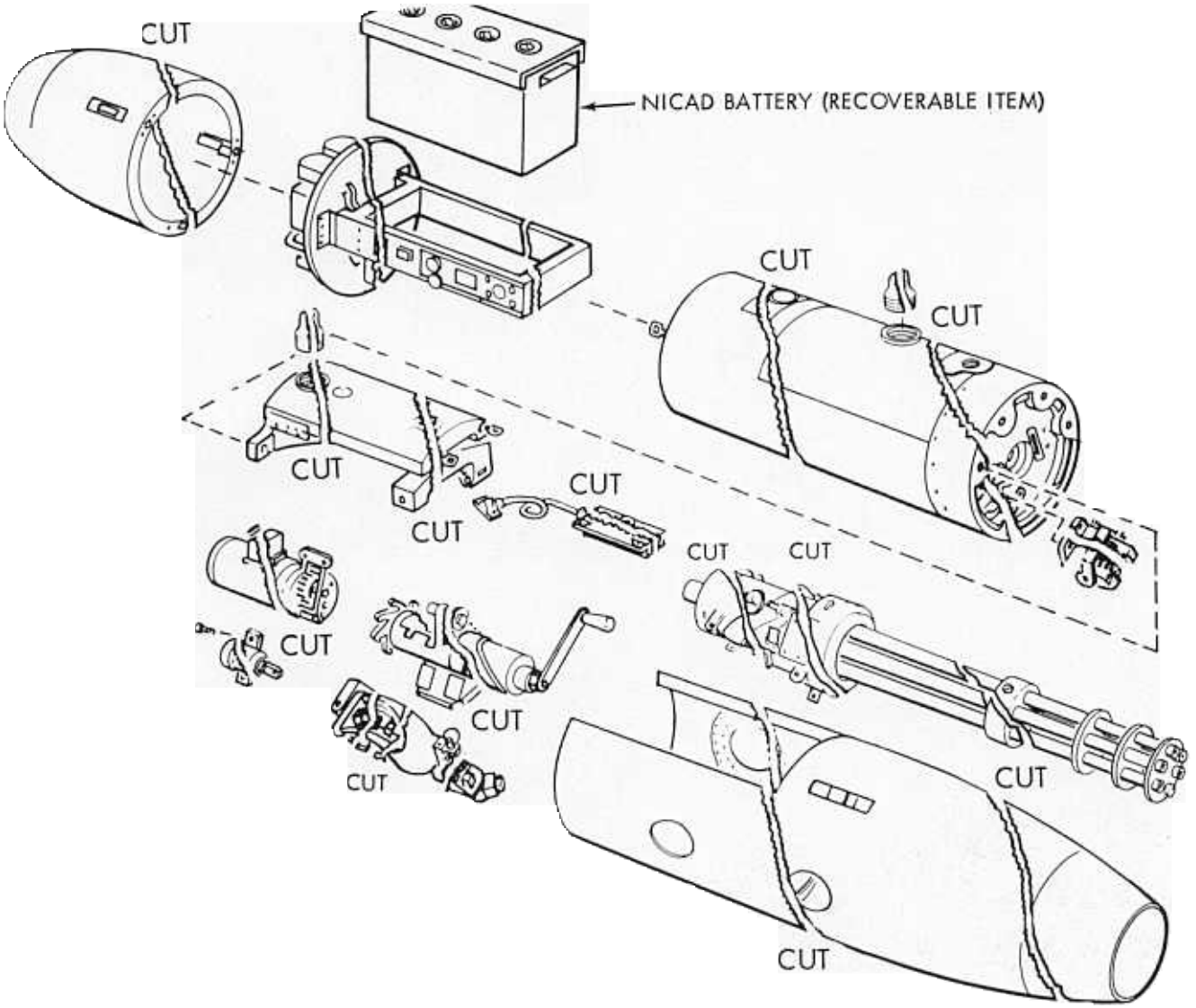

FIGURE 42. DEMILITARIZATION OF M18/M18E1 7.62MM MACHINE GUN AIRCRAFT ARMAMENT POD

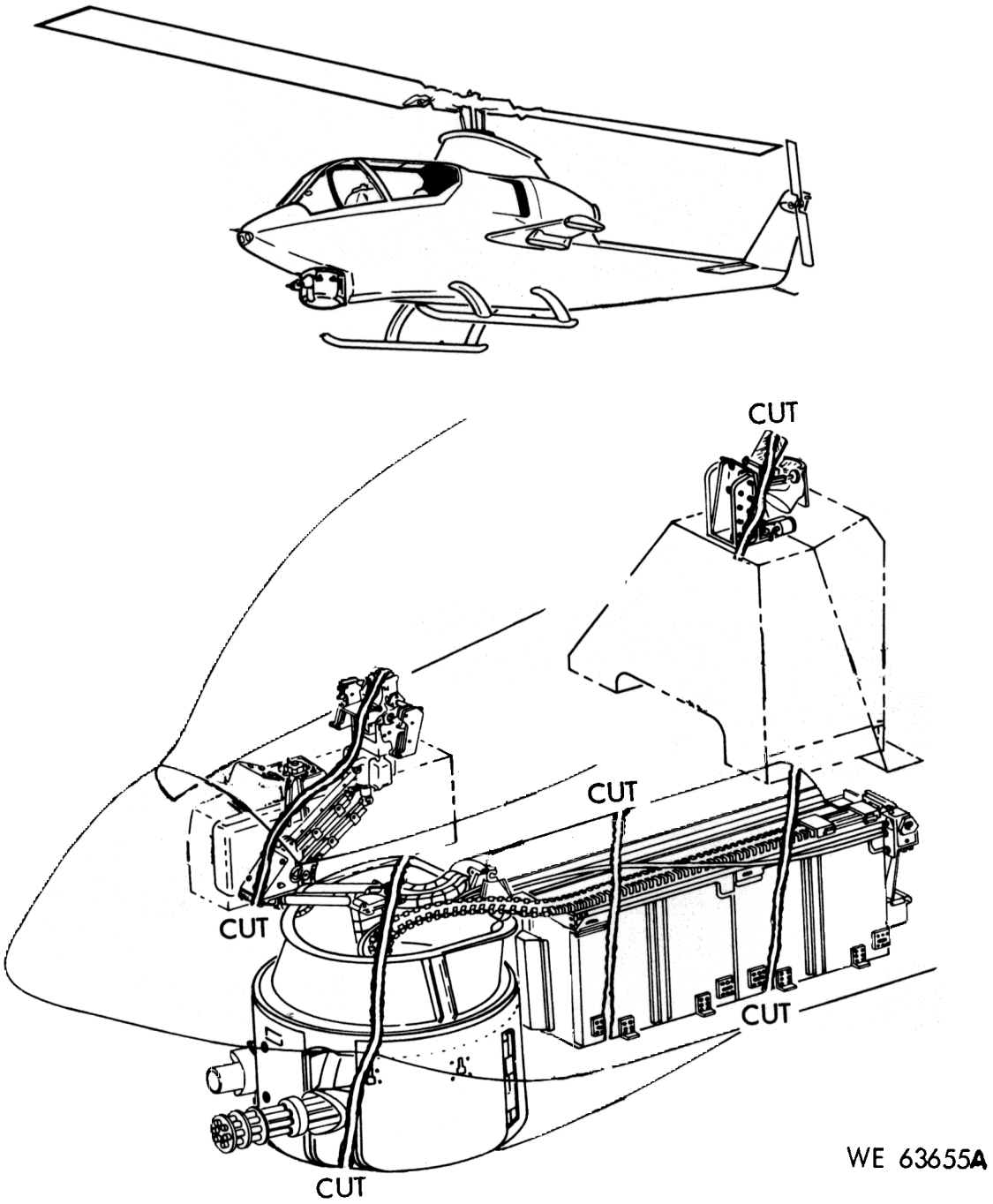

FIGURE 43. DEMILITARIZATION OF XM28 7.62MM MACHINE GUN — 40MM GRENADE LAUNCHER HELICOPTER ARMAMENT SUBSYSTEM

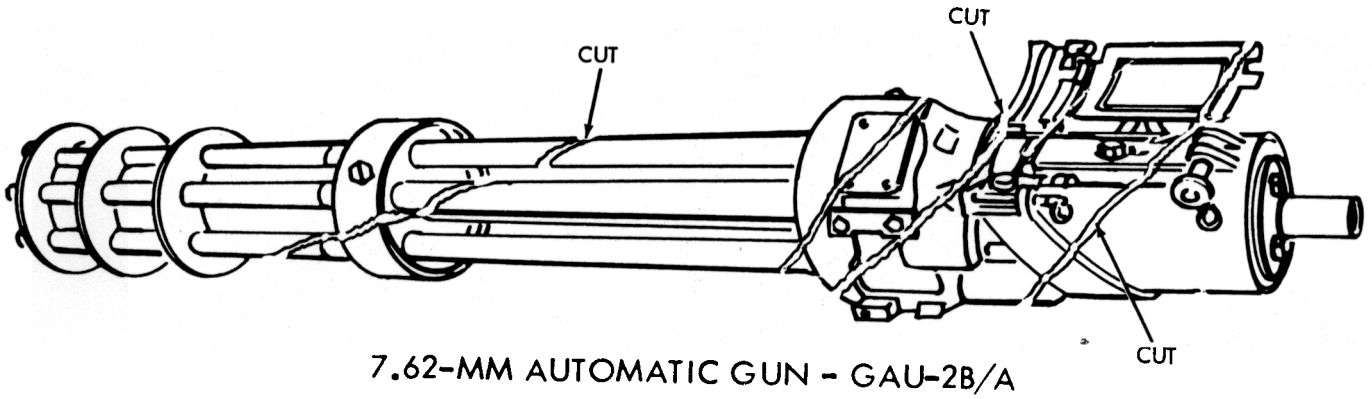

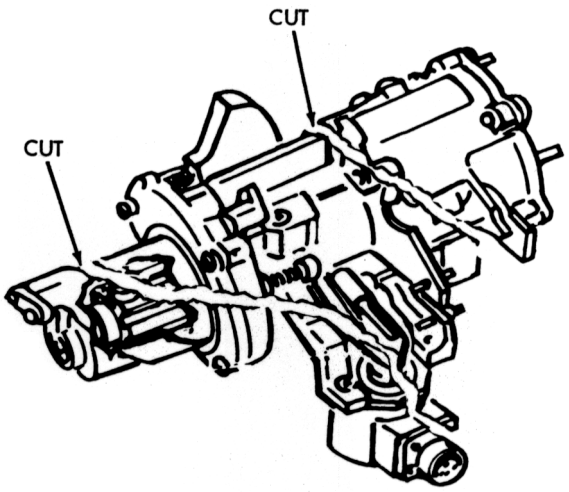

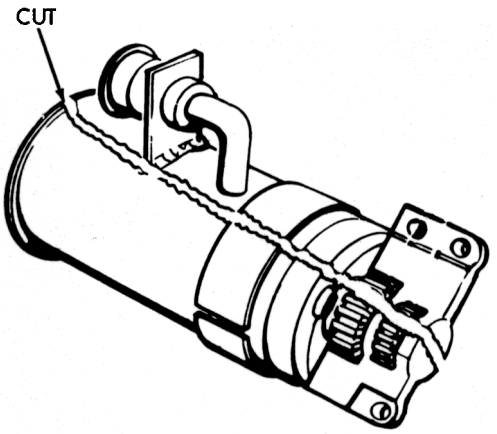

FIGURE 44. DEMILITARIZATION OF M134 (GAU-2B/A) 7.62MM MACHINE GUN

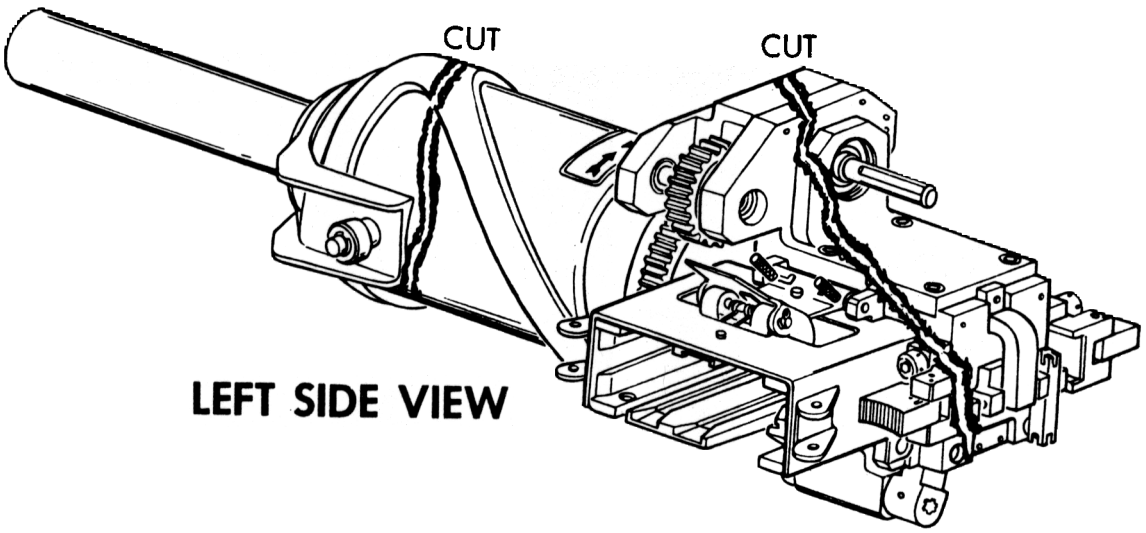

LAUNCHER, GRENADE-40MM, XM 129

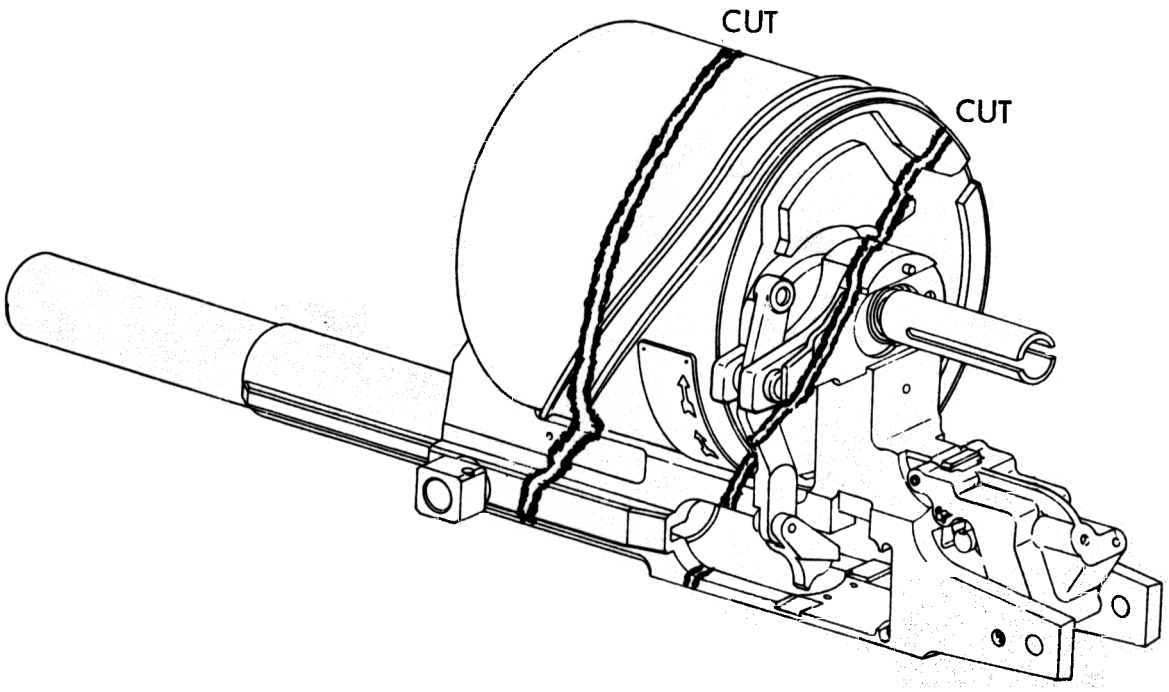

FIGURE 45. DEMILITARIZATION OF GRENADE LAUNCHERS

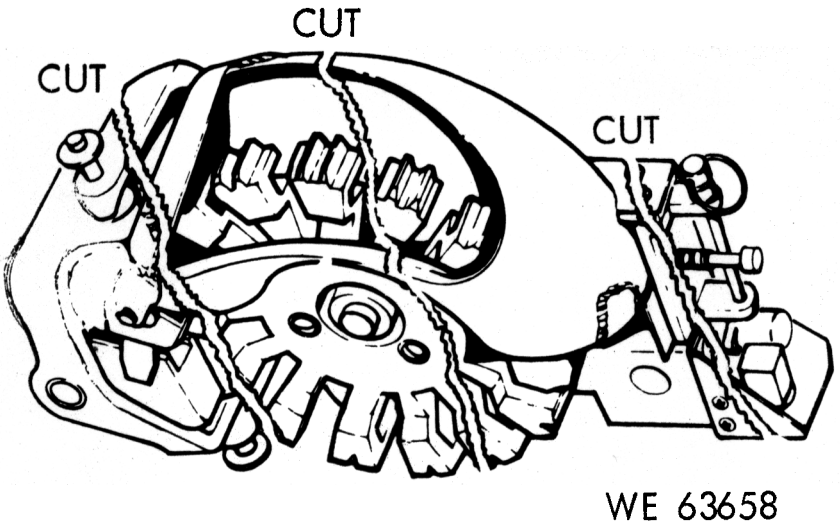

FIGURE 46. DEMILITARIZATION OF AUTOMATIC GUN FEEDER MAU-57A/A

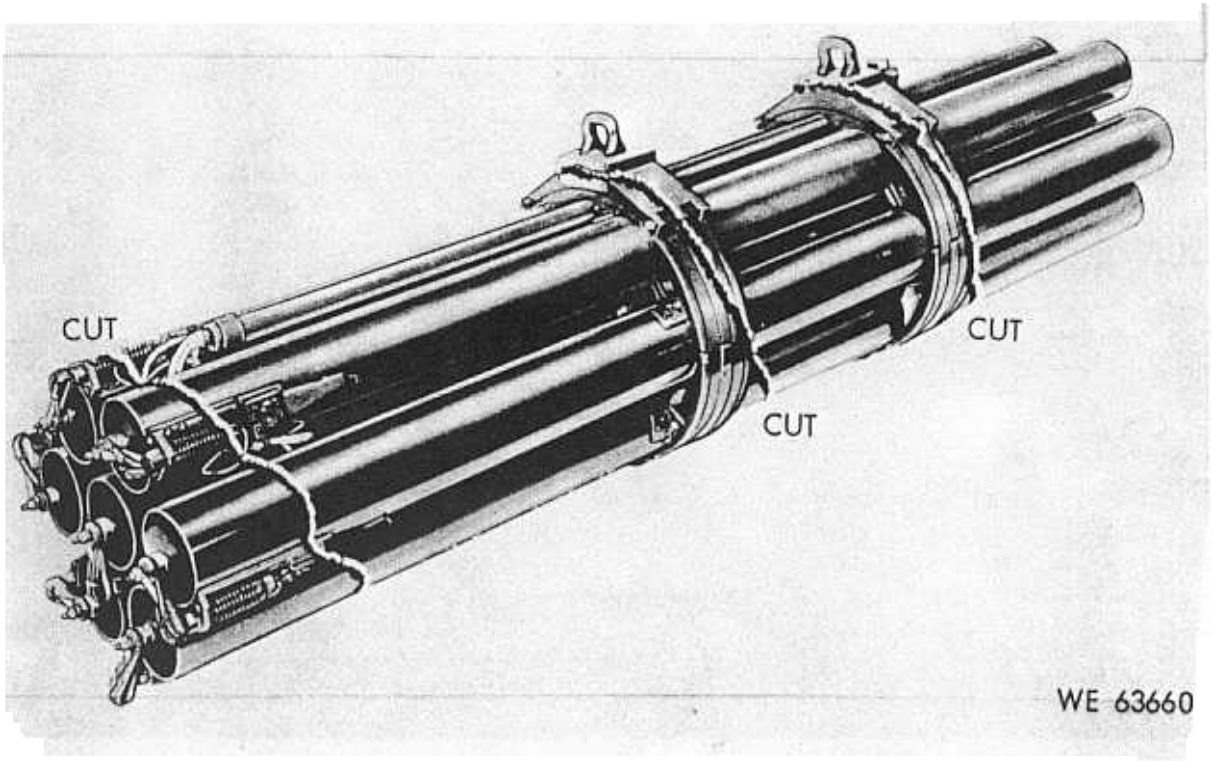

FIGURE 47. DEMILITARIZATION OF XM158 2.75-INCH AIRCRAFT ROCKET LAUNCHER

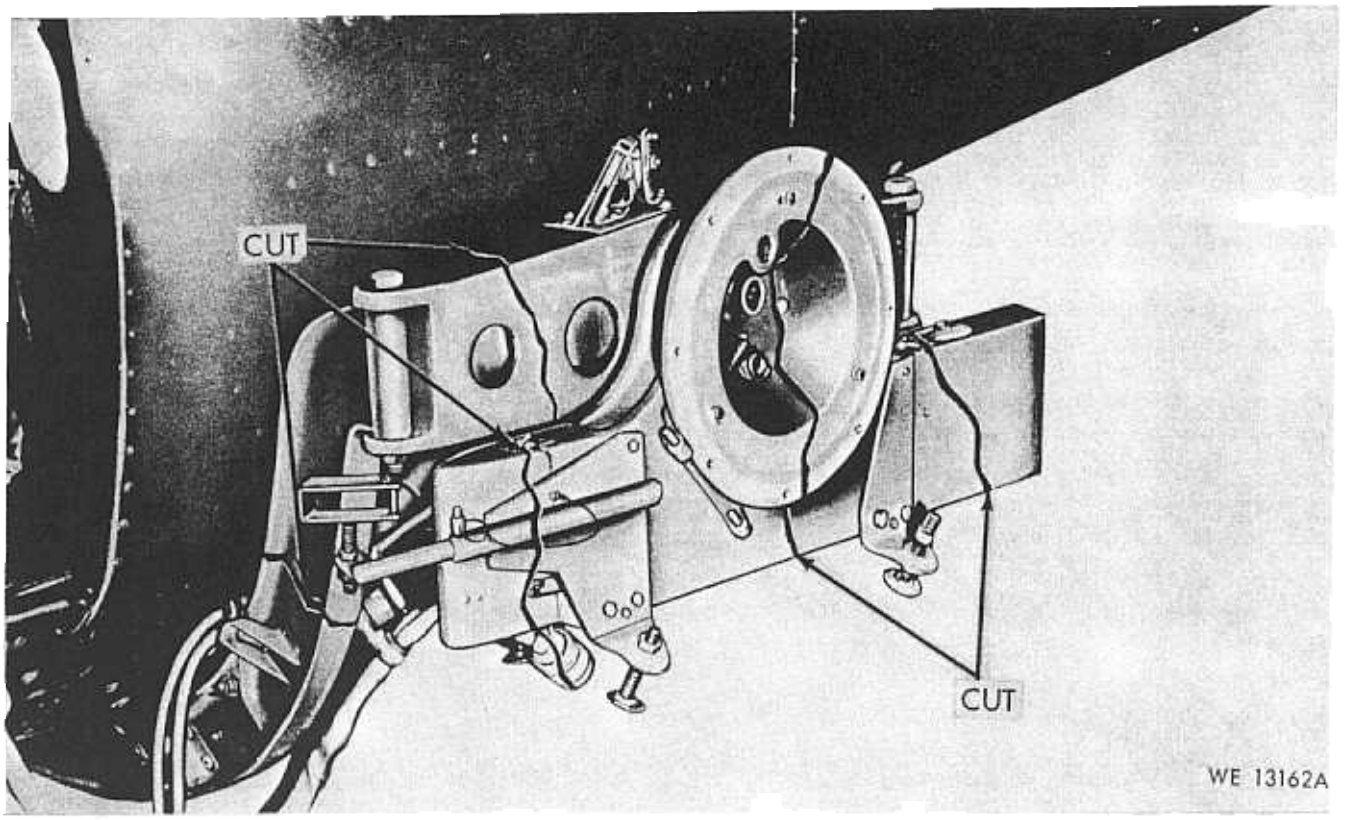

FIGURE 48. DEMILITARIZATION OF XM156 HELICOPTER MULTIARMAMENT MOUNT

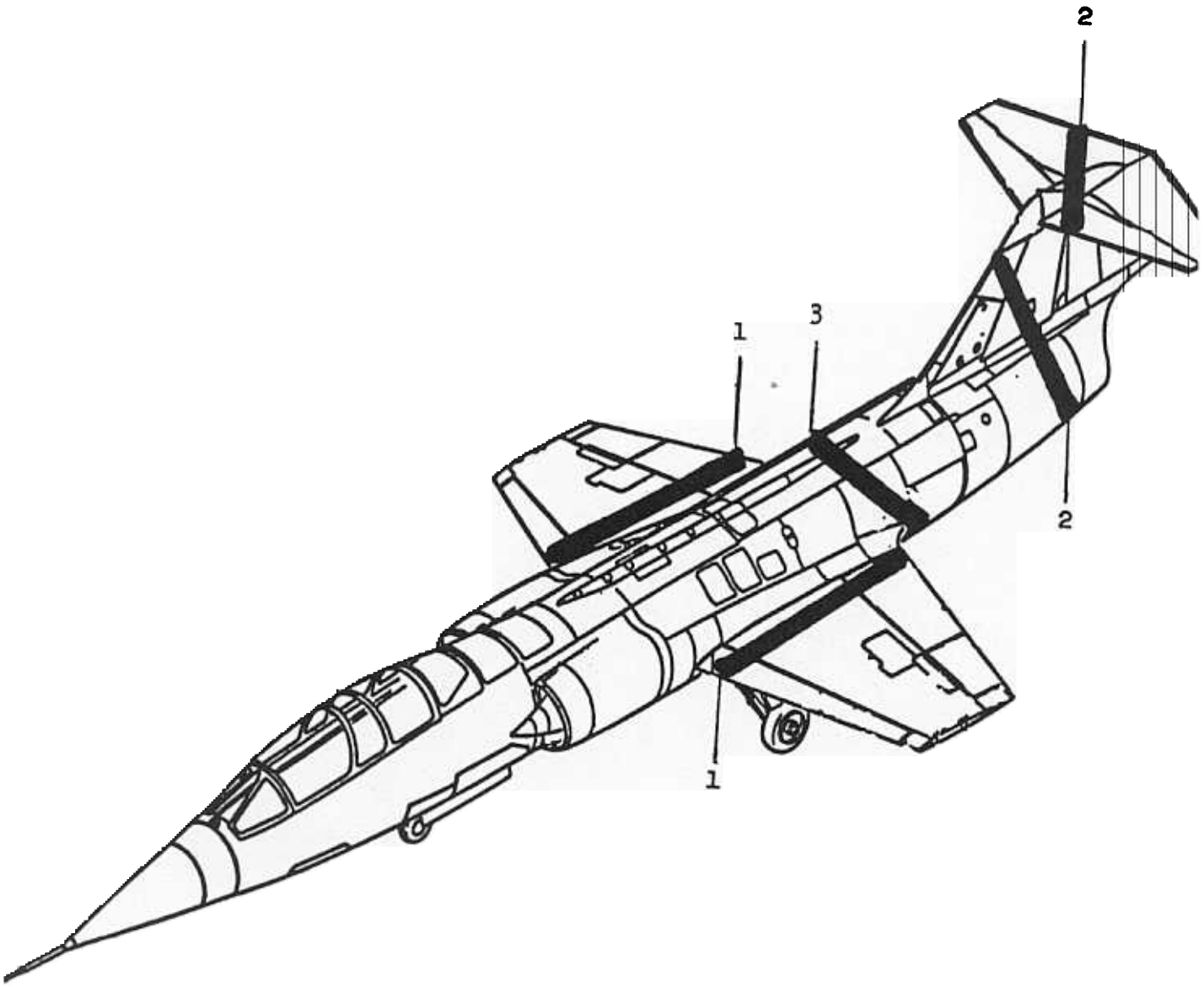

FIGURE 49. DEMILITARIZATION OF SINGLE ENGINE AIRCRAFT

1. Completely sever the wing spar where the wing attaches and becomes a part of the fuselage.
2. Mutilate the attaching fittings of the horizontal and vertical stabilizer.
3. Completely sever the fuselage at the most critical point between the wing and tail assembly.

40MM GRENADE LAUNCHER - M75

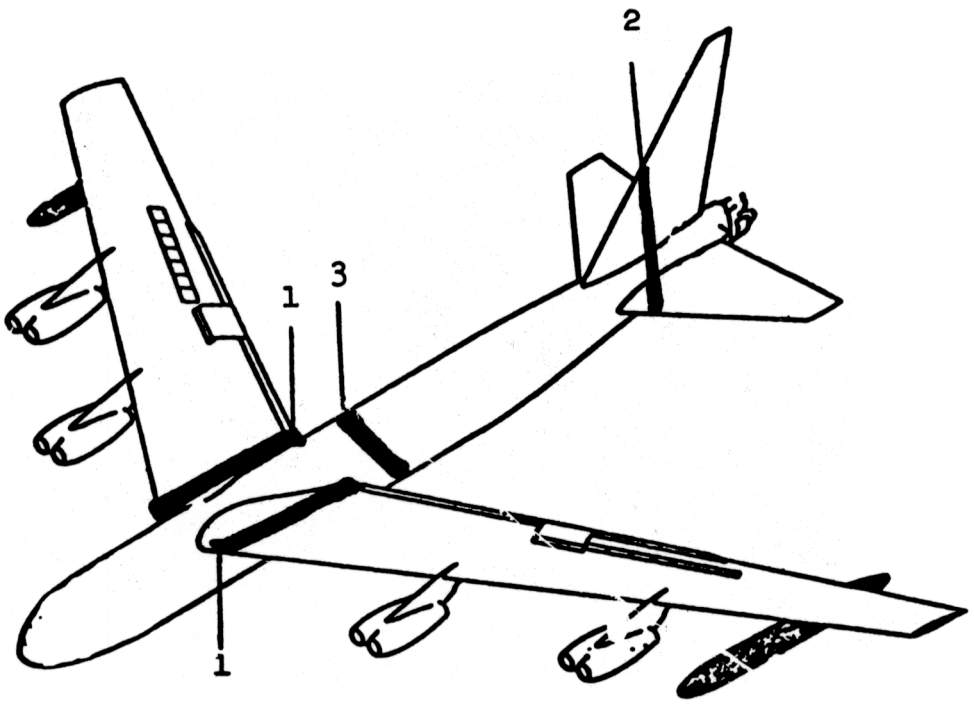

FIGURE 50. DEMILITARIZATION OF MULTIENGINE AIRCRAFT

1. Completely sever the wing spar where the wing attaches and becomes a part of the fuselage.
2. Mutilate the attaching fittings of the horizontal and vertical stabilizer.
3. Completely sever the fuselage at the most critical point between the wing and tail assembly.

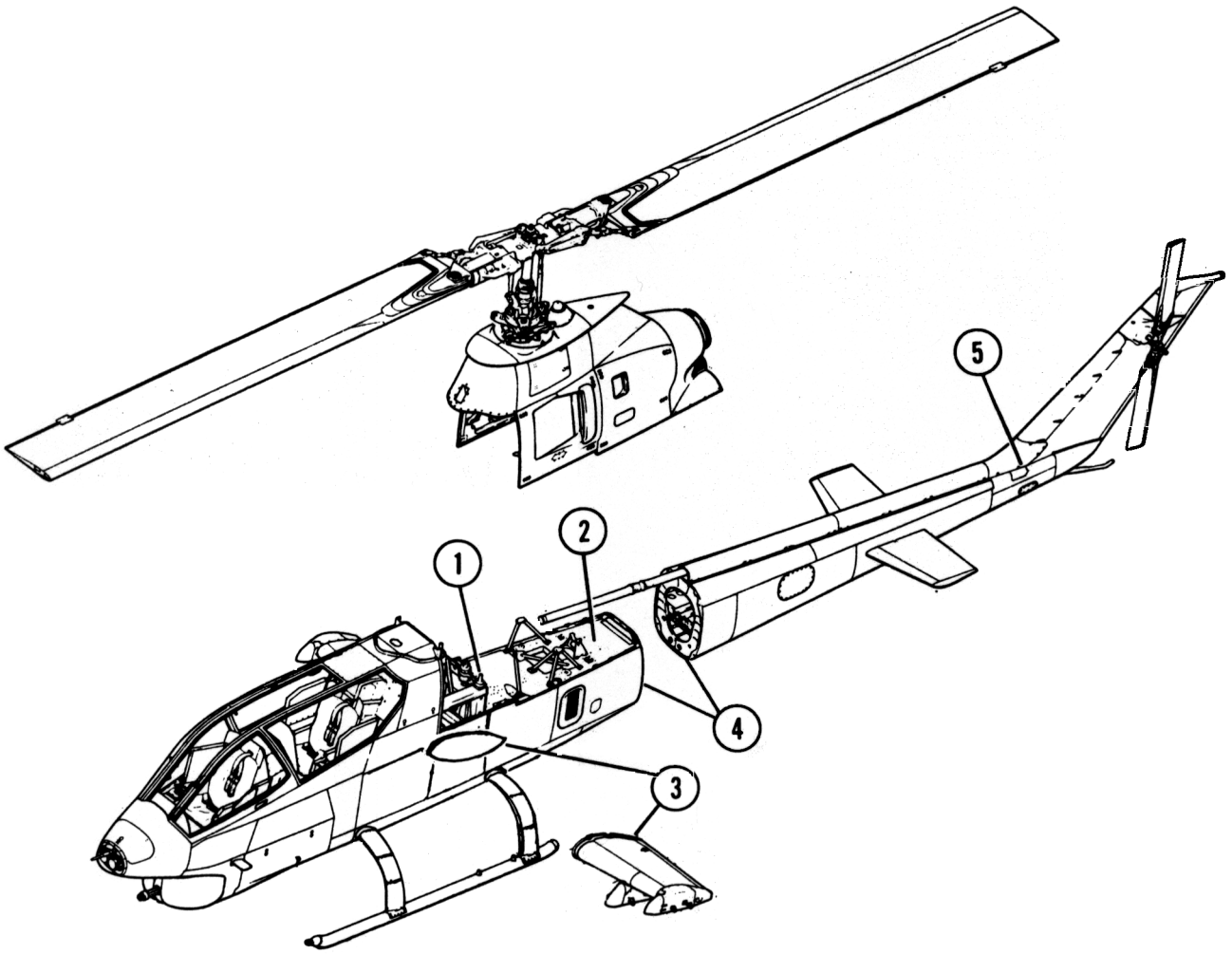

AIRCRAFT (FUSELAGE) ATTACHING FITTING WHICH REQUIRE DEMILITARIZATION

1. TRANSMISSION DECK IN AREA OF MOUNTS.
2. ENGINE DECK IN AREA OF MOUNTS.
3. WING TO FUSELAGE FITTINGS.
4. FUSELAGE SECTION TO FUSELAGE SECTION.
5. TAIL ROTOR GEAR BOX MOUNTING STRUCTURE.

NOTE: AIRFRAME (FUSELAGE) WILL BE MUTILATED BY DESTROYING ATTACHING STRUCTURE BY CUTTING, CHOPPING, TEARING, SHREDDING, CRUSHING, OR SMELTING TO THE DEGREE THAT AIRCRAFT WILL BE UNFIT FOR REPAIR OR FLIGHT.

FIGURE 51. DEMILITARIZATION OF ATTACK HELICOPTER

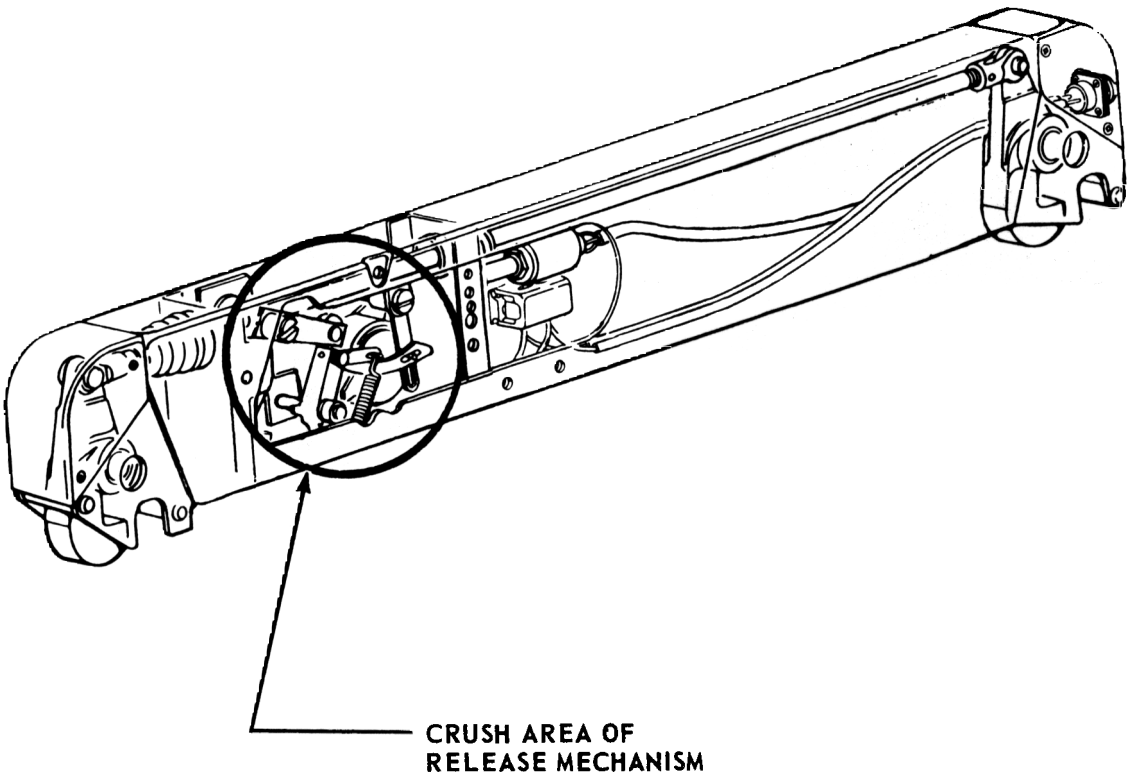

DEMILITARIZATION OF ELECTRICALLY-
OPERATED AIRCRAFT BOMB RACK
(F-100 SHOWN)

FIGURE 52. DEMILITARIZATION OF BOMB RACK ELECTRICALLY OPERATED

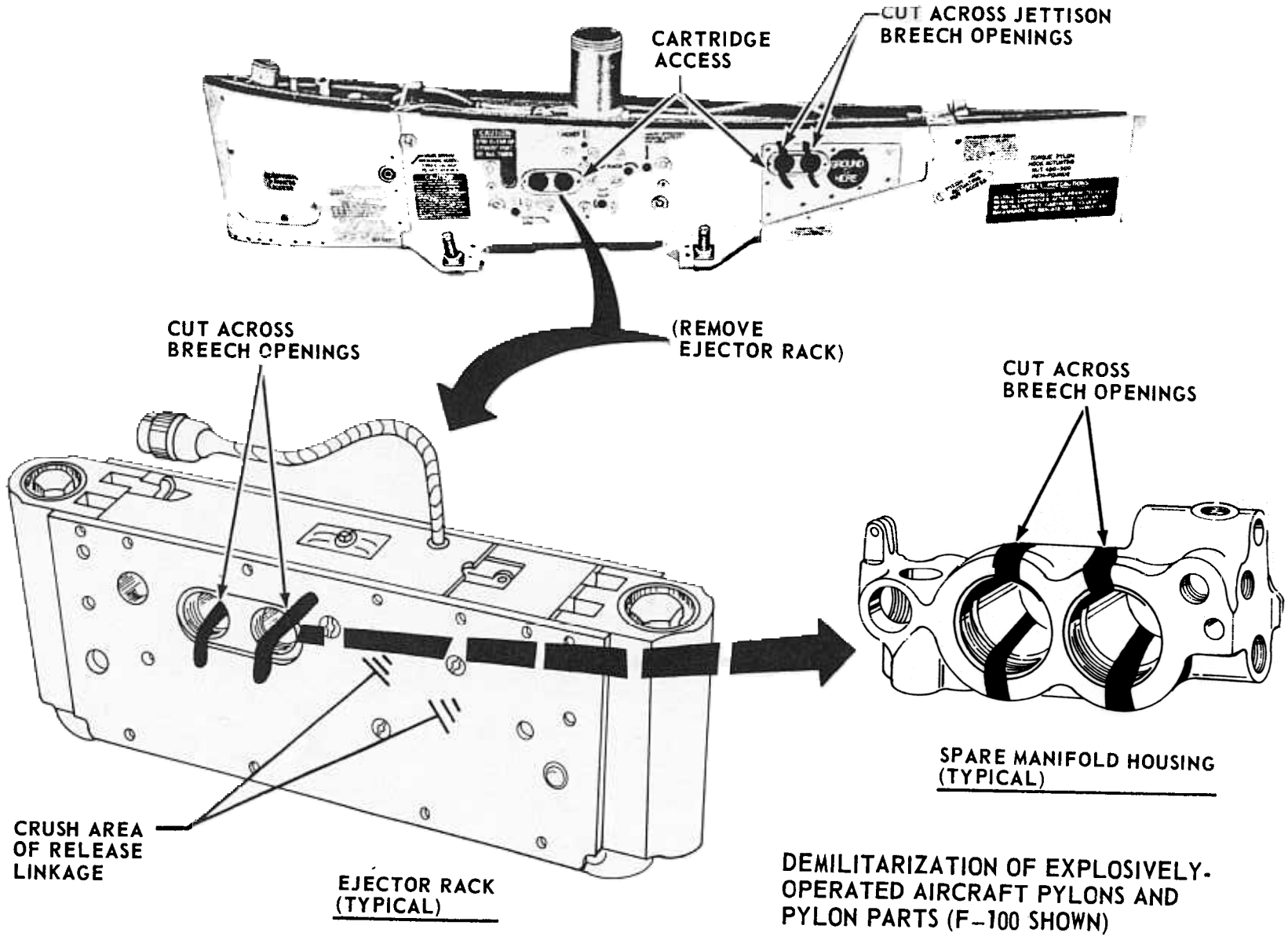

FIGURE 53. DEMILITARIZATION OF AIRCRAFT PYLONS AND PYLON PARTS

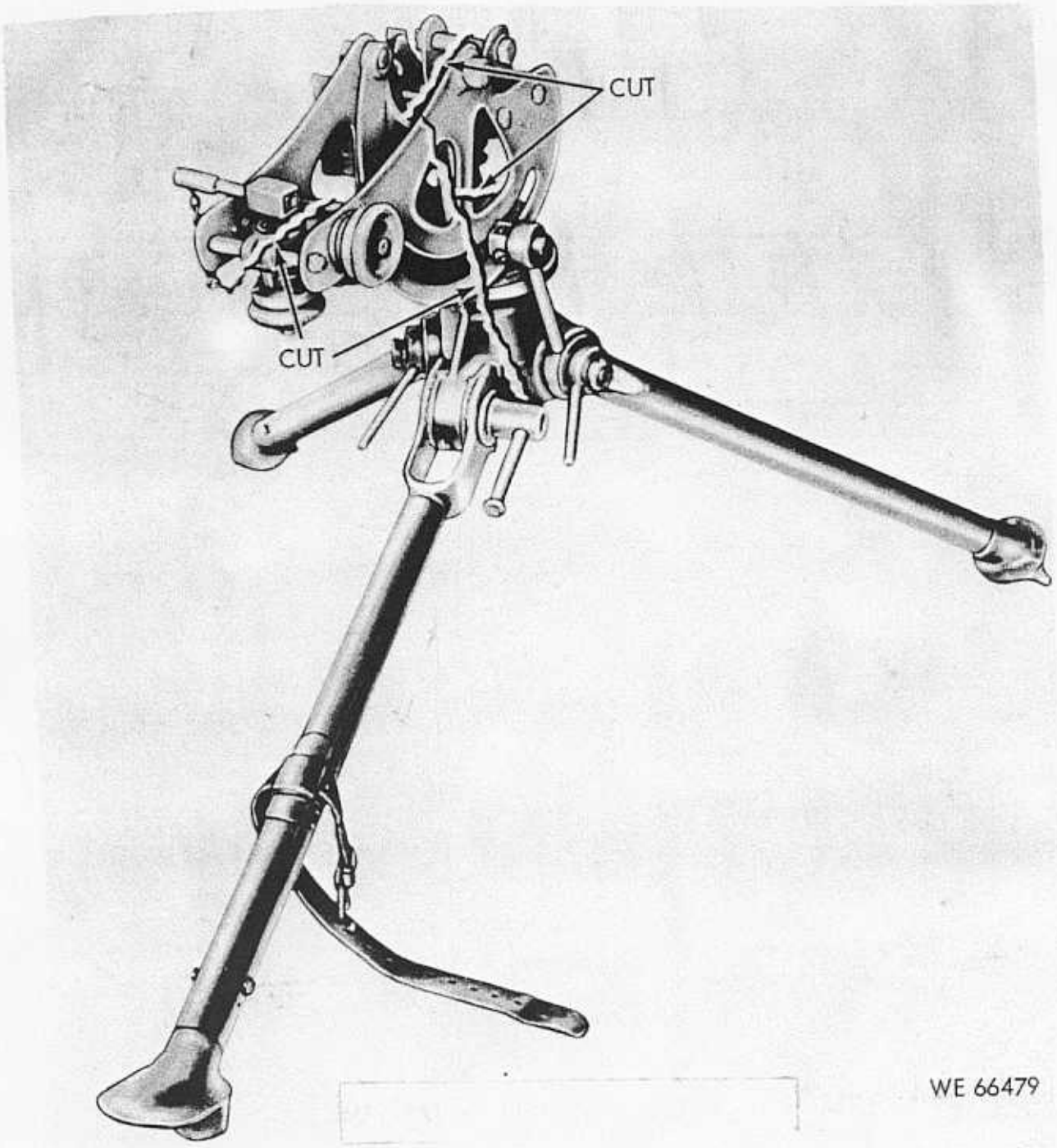

FIGURE 54. DEMILITARIZATION OF MACHINE GUN TRIPOD MOUNT M1917A1

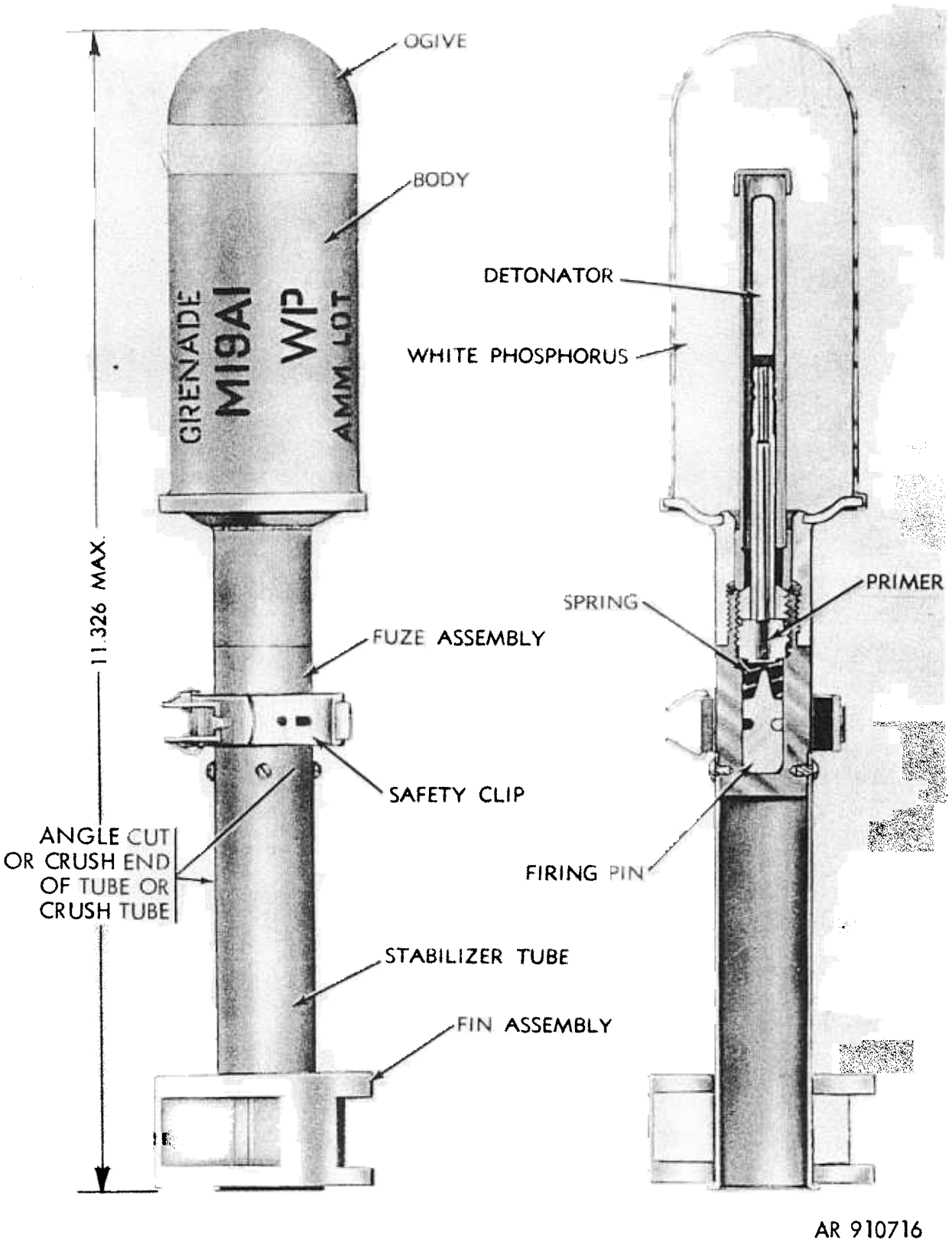

FIGURE 55. DEMILITARIZATION OF GRENADE, RIFLE

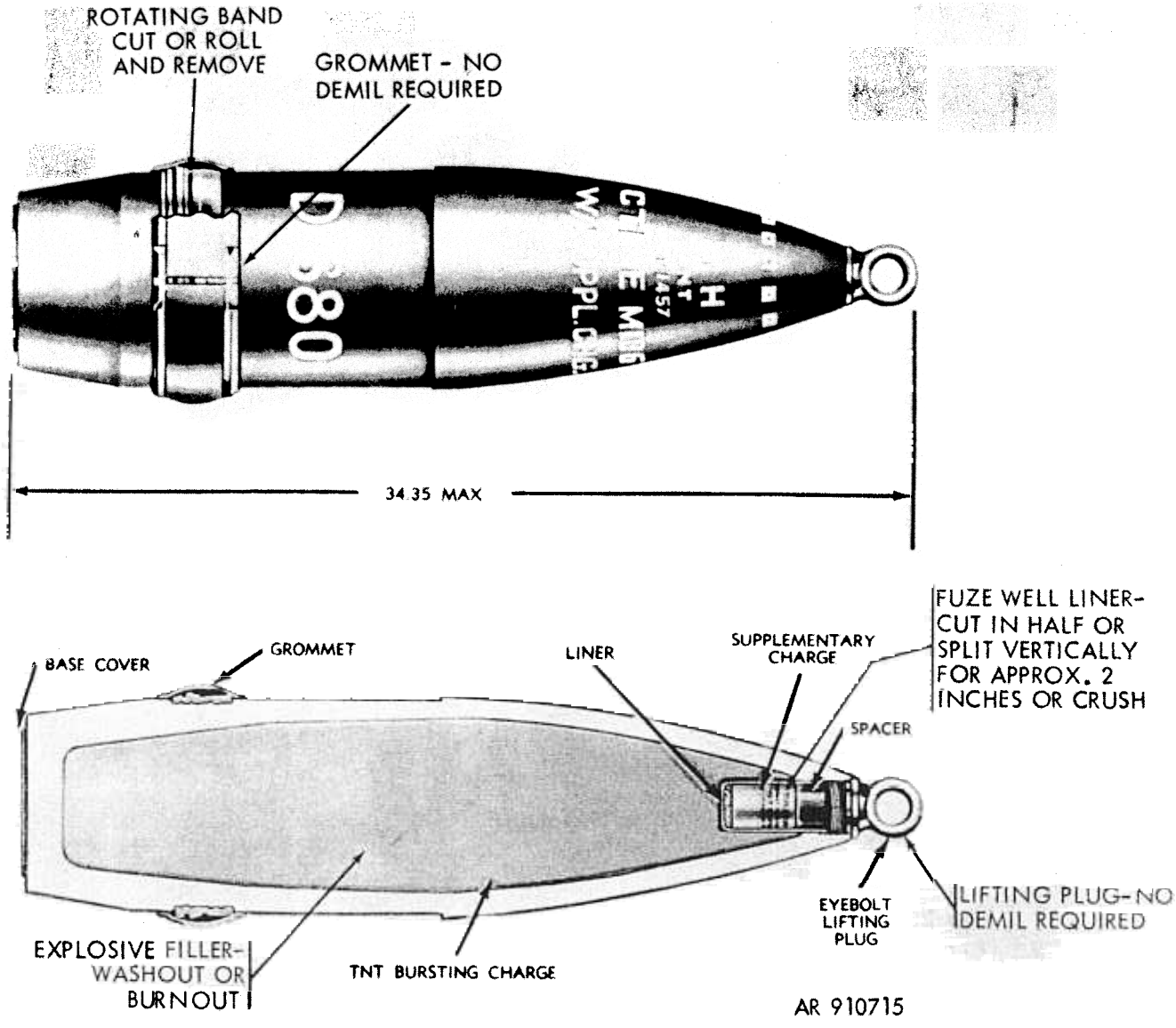

FIGURE 56. DEMILITARIZATION OF ARTILLERY PROJECTILE

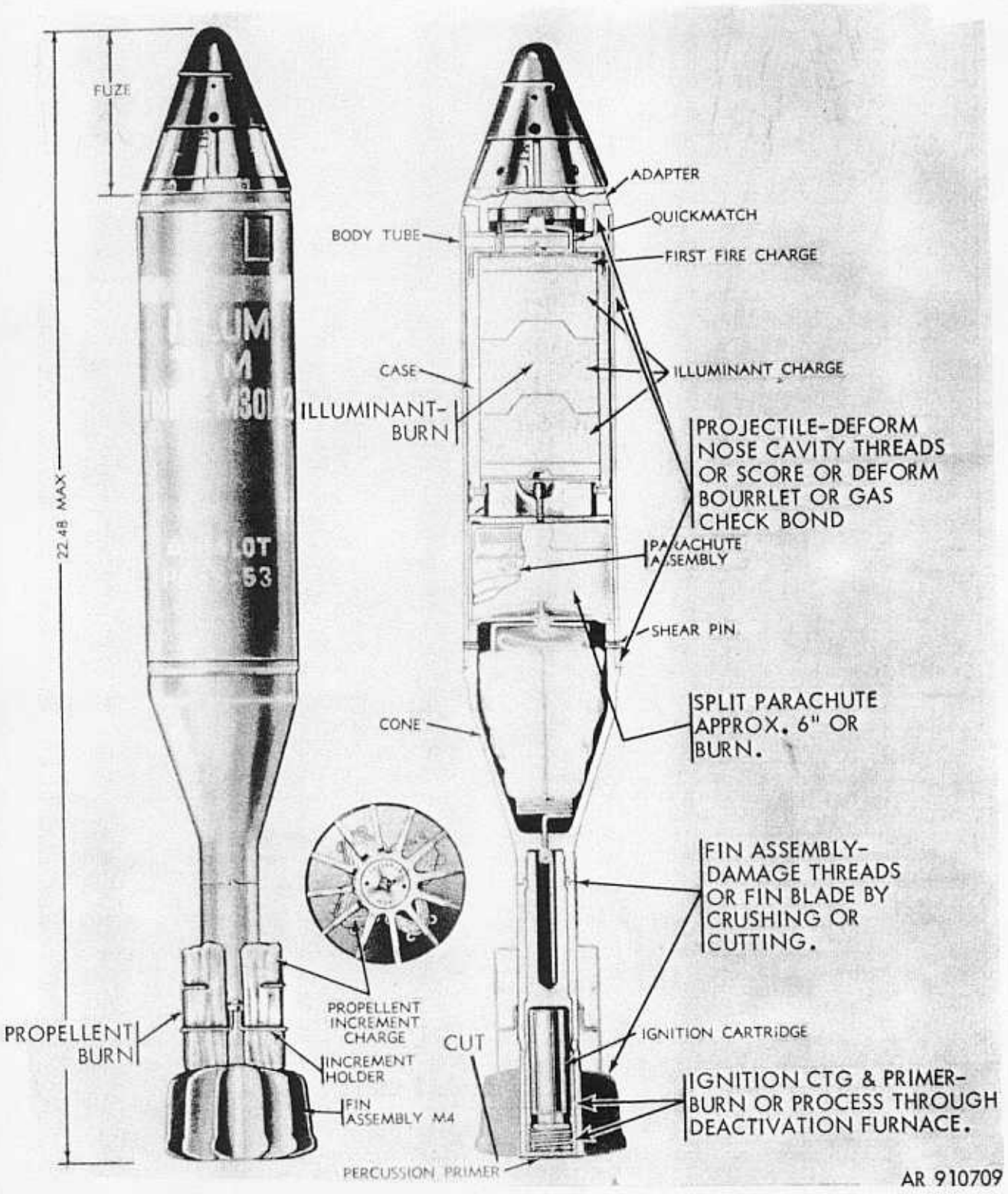

FIGURE 57. DEMILITARIZATION OF MORTAR AMMUNITION

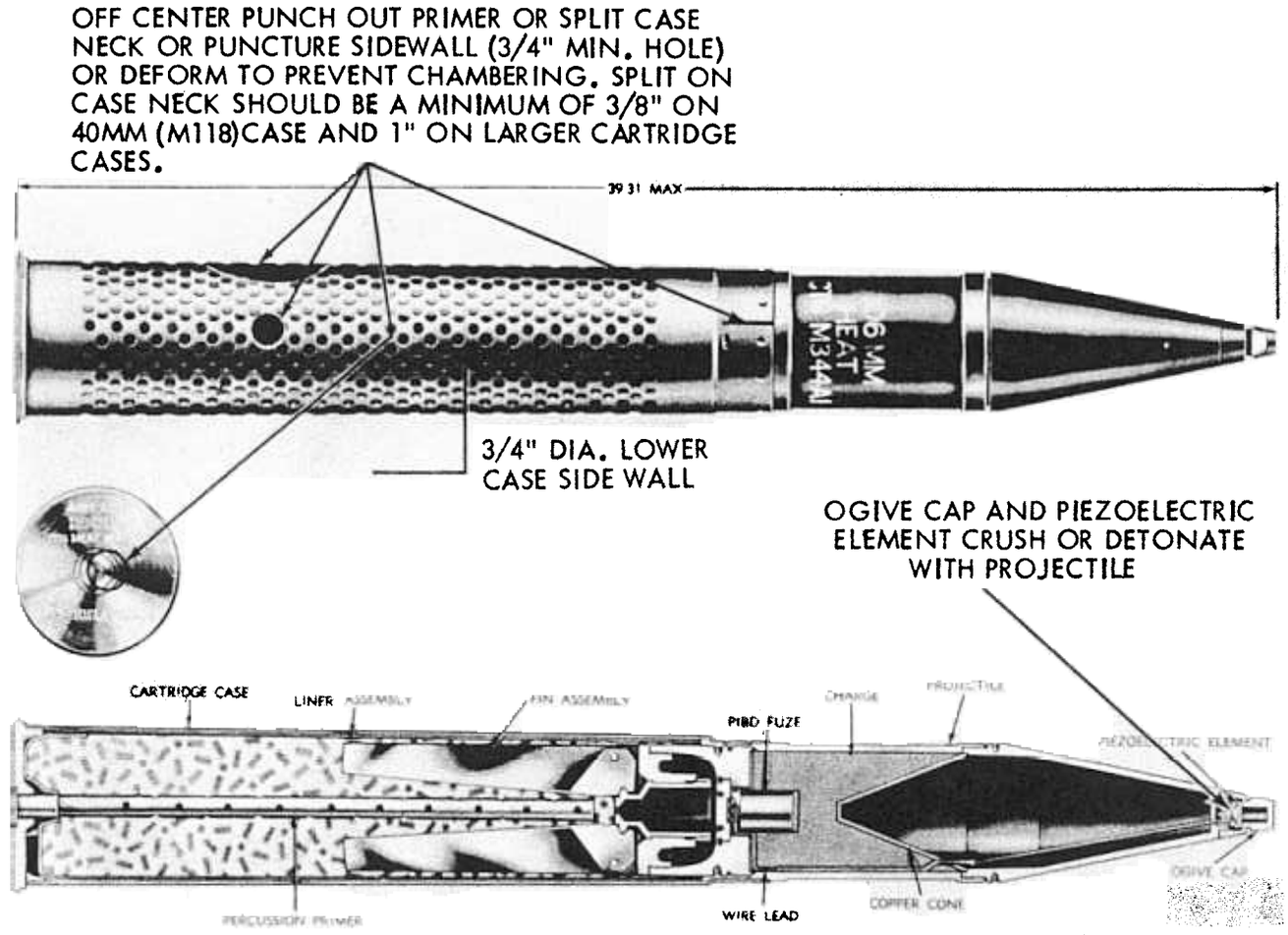

FIGURE 58. DEMILITARIZATION OF ARTILLERY AMMUNITION

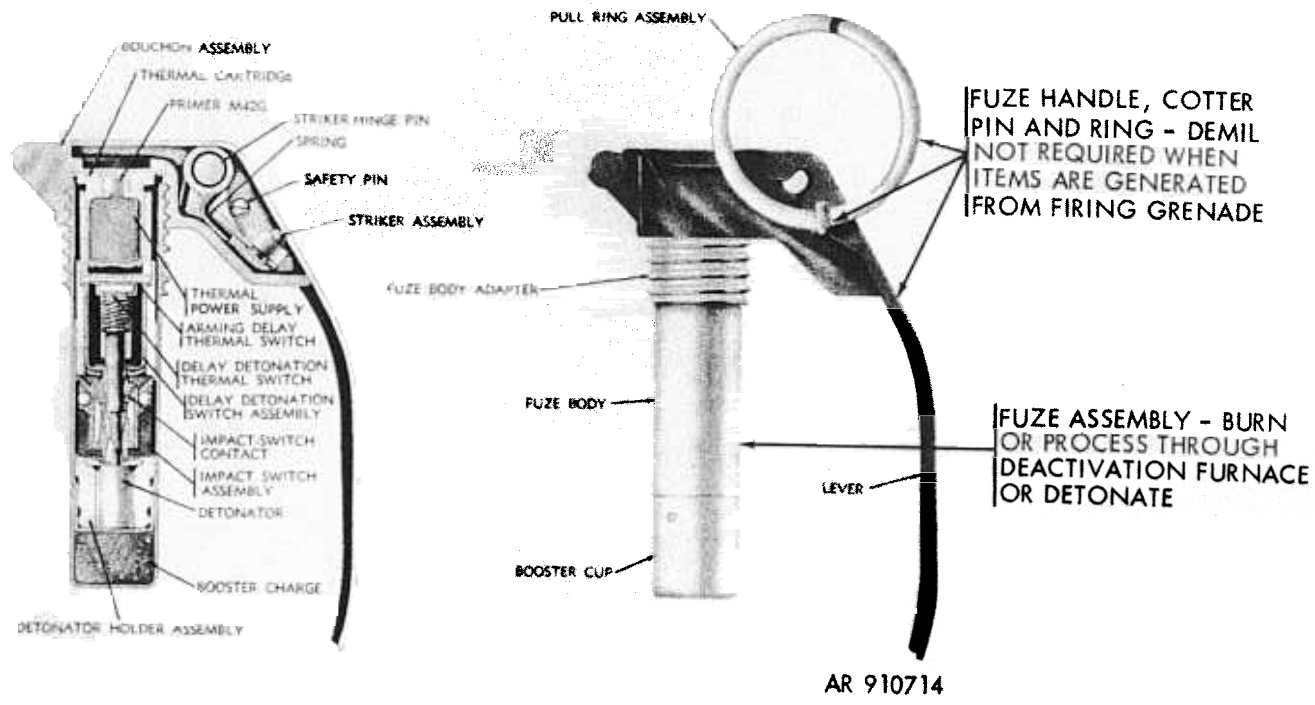

FIGURE 59. DEMILITARIZATION OF FUZE, HAND GRENADE

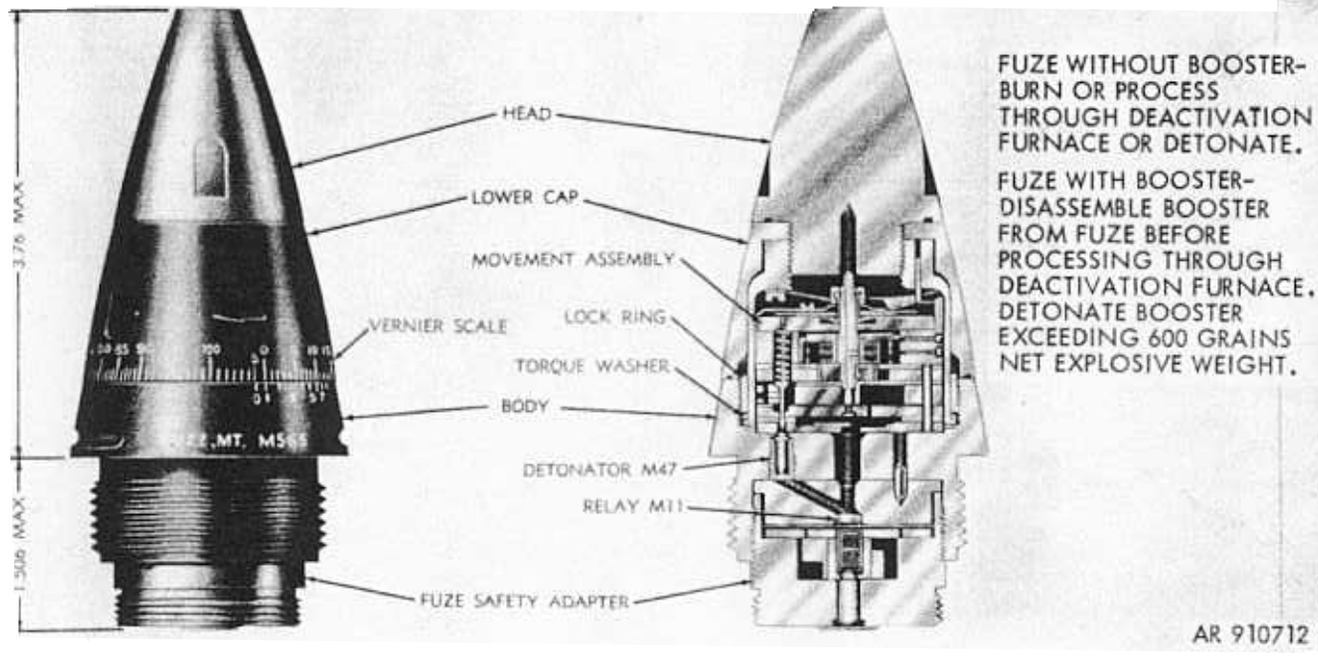

FIGURE 60. DEMILITARIZATION OF FUZE FOR ARTILLERY AMMUNITION

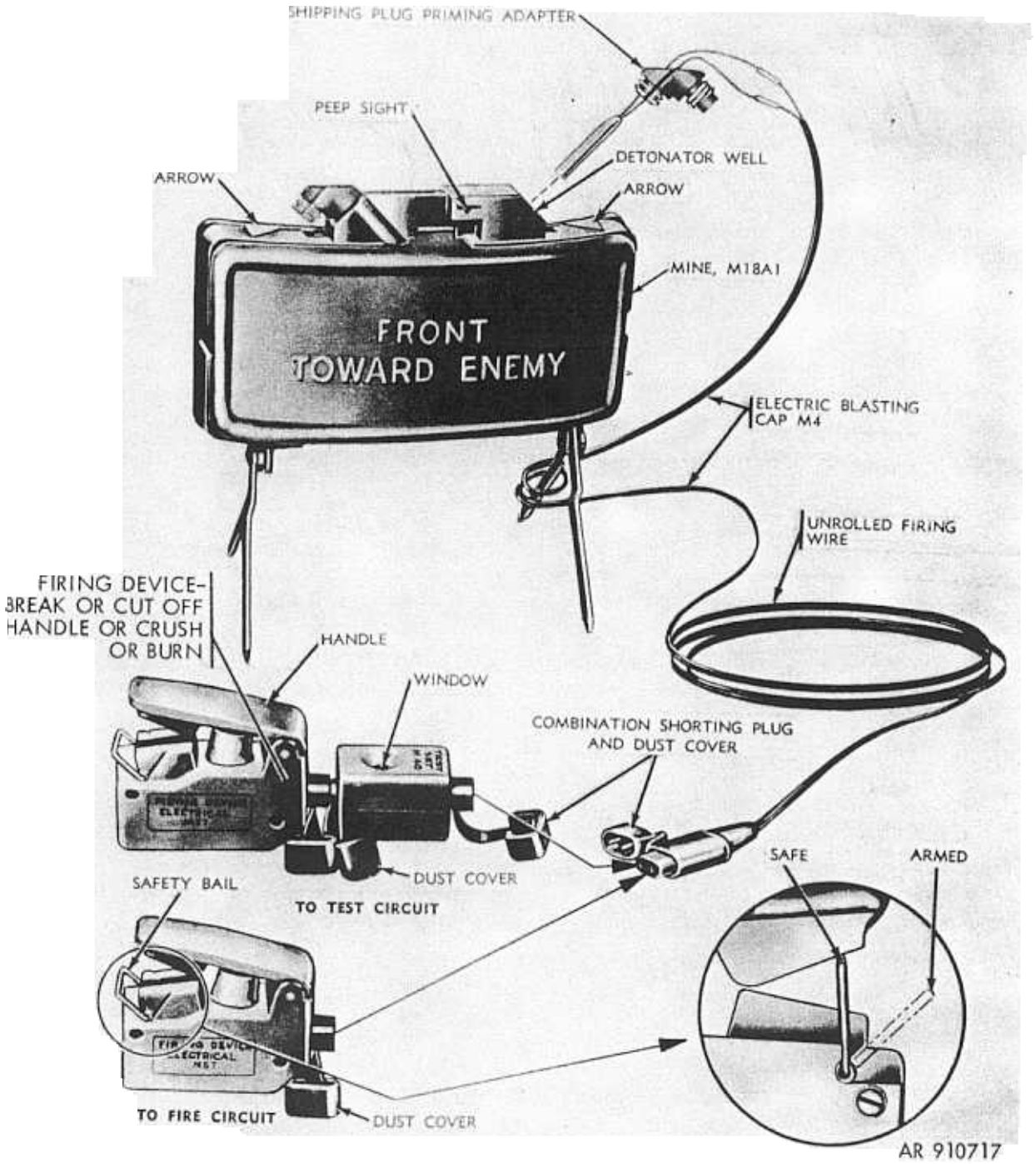

FIGURE 61. DEMILITARIZATION OF FIRING DEVICE FOR ANTI PERSONNEL MINE

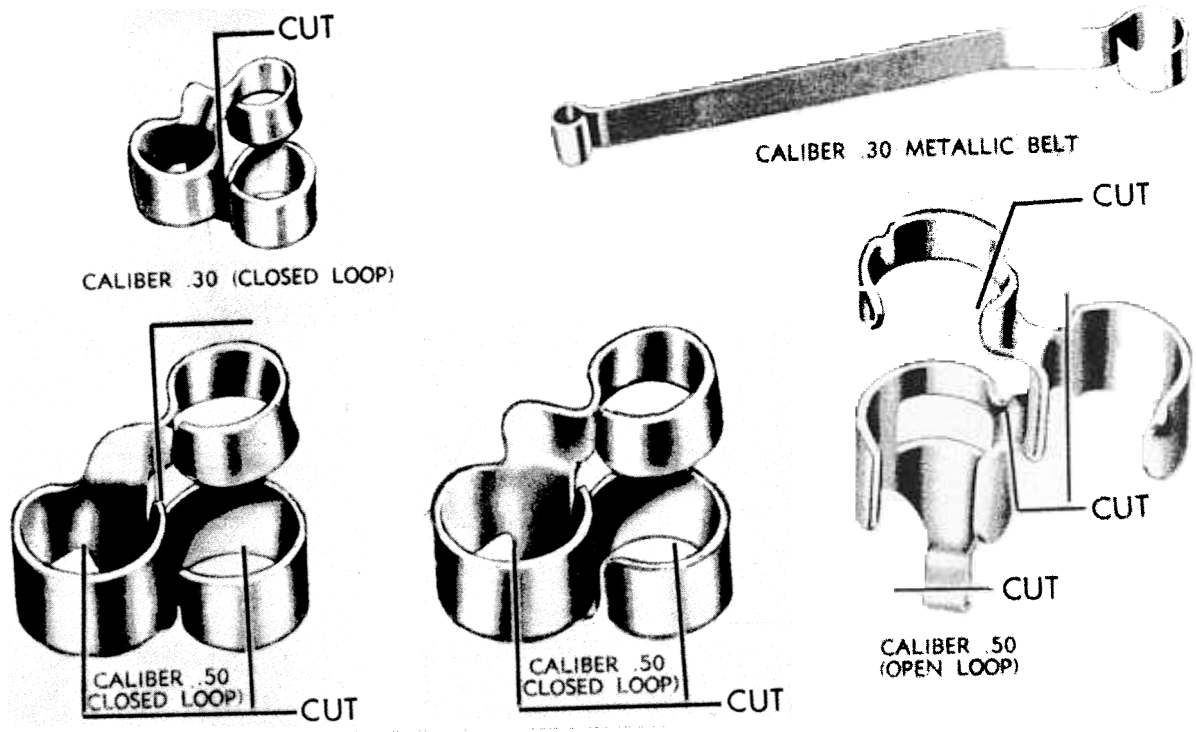

NEW/UNUSED LINKS:

CUT IN ANY ONE AREA OR CRUSH ANY ONE LOOP TO PREVENT A ROUND OF AMMUNITION FROM BEING INSERTED IN A NORMAL MANNER. USED (FIRED OR DISTORTED/BENT NEW LINKS) DO NOT REQUIRE DEMILITARIZATION.

AR 910710

FIGURE 62. DEMILITARIZATION OF LINKS FOR SMALL ARMS AMMUNITION

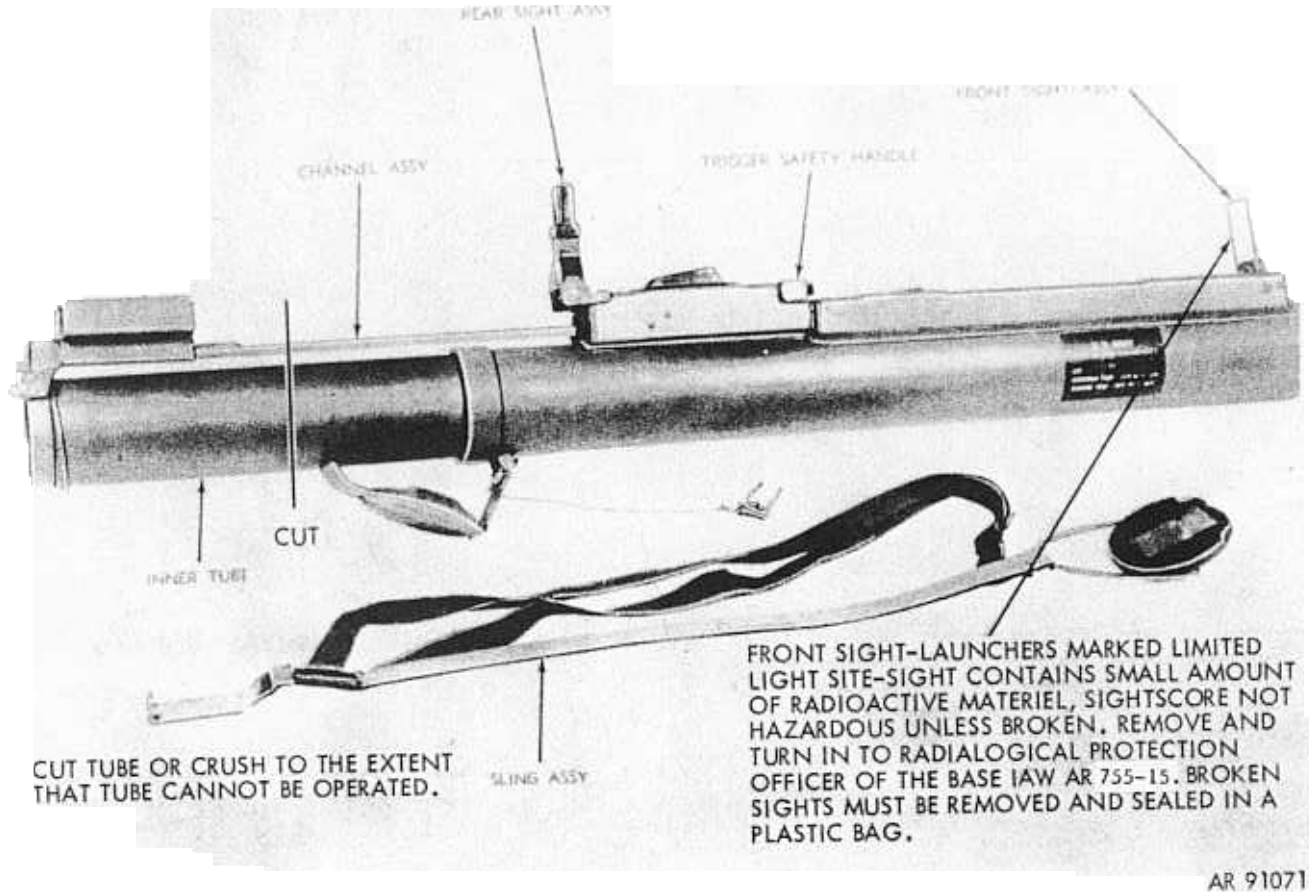

FIGURE 63. DEMILITARIZATION OF LAUNCHER, ROCKET, 66MM, M72 SERIES

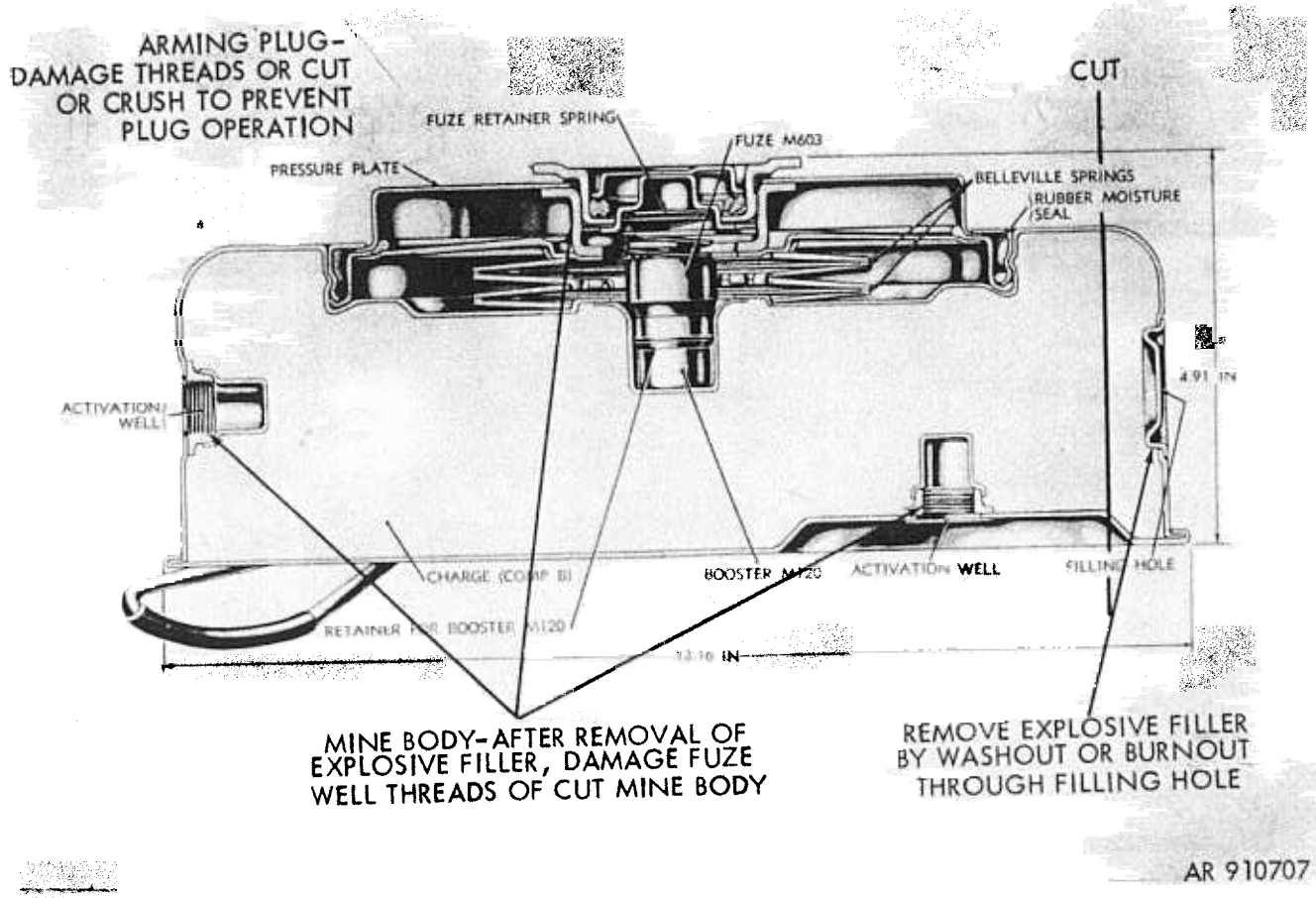

FIGURE 64. DEMILITARIZATION OF MINE, ANTI-TANK

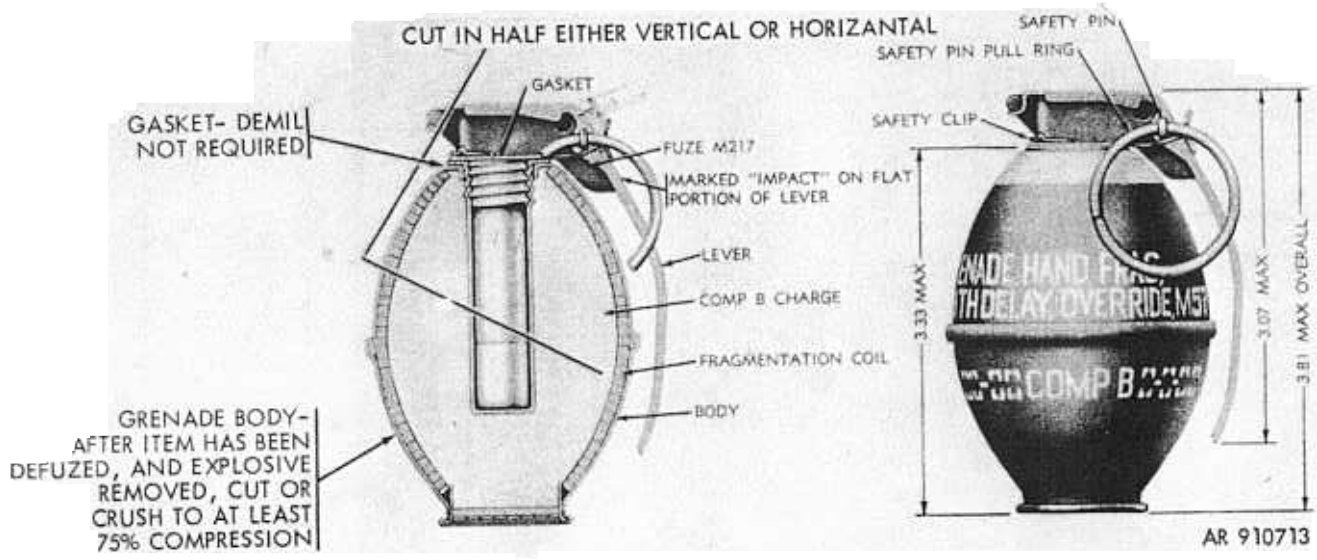

FIGURE 65. DEMILITARIZATION OF GRENADE, HAND, FRAGMENTATION

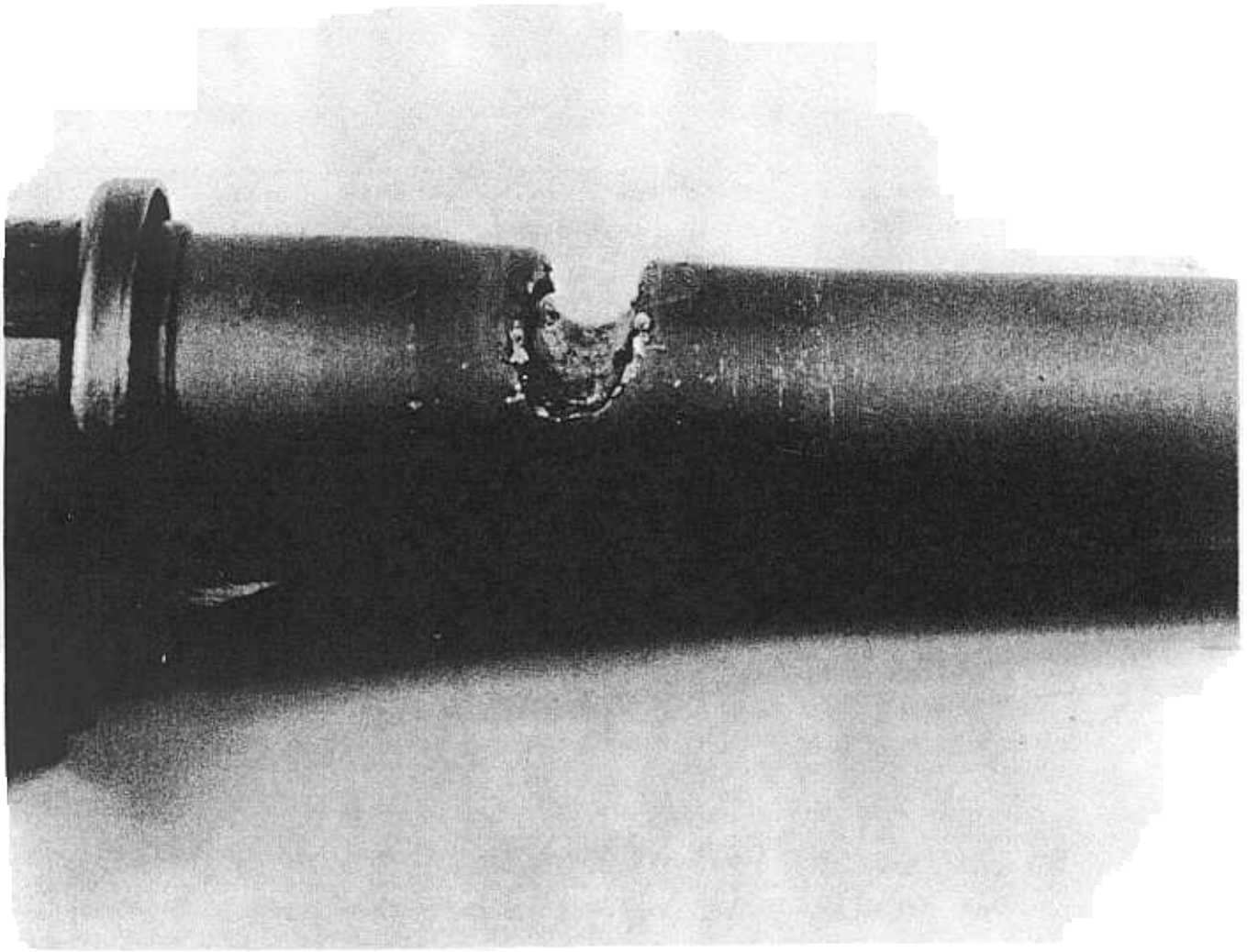

FIGURE 66. DEMILITARIZATION OF BARREL FOR M1903 DRILL RIFLE

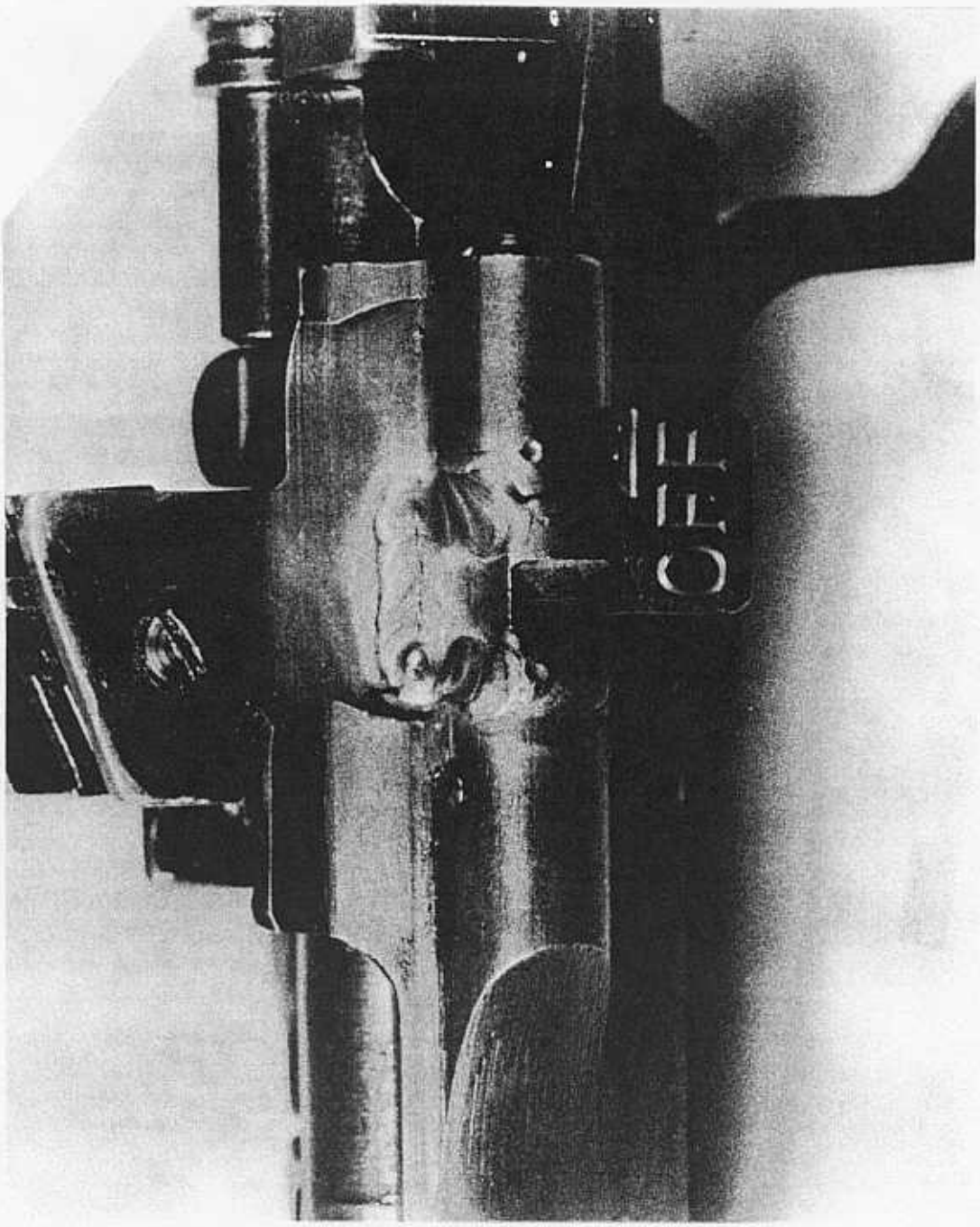

FIGURE 67. DEMILITARIZATION OF CUTOFF FOR M1903 DRILL RIFLE

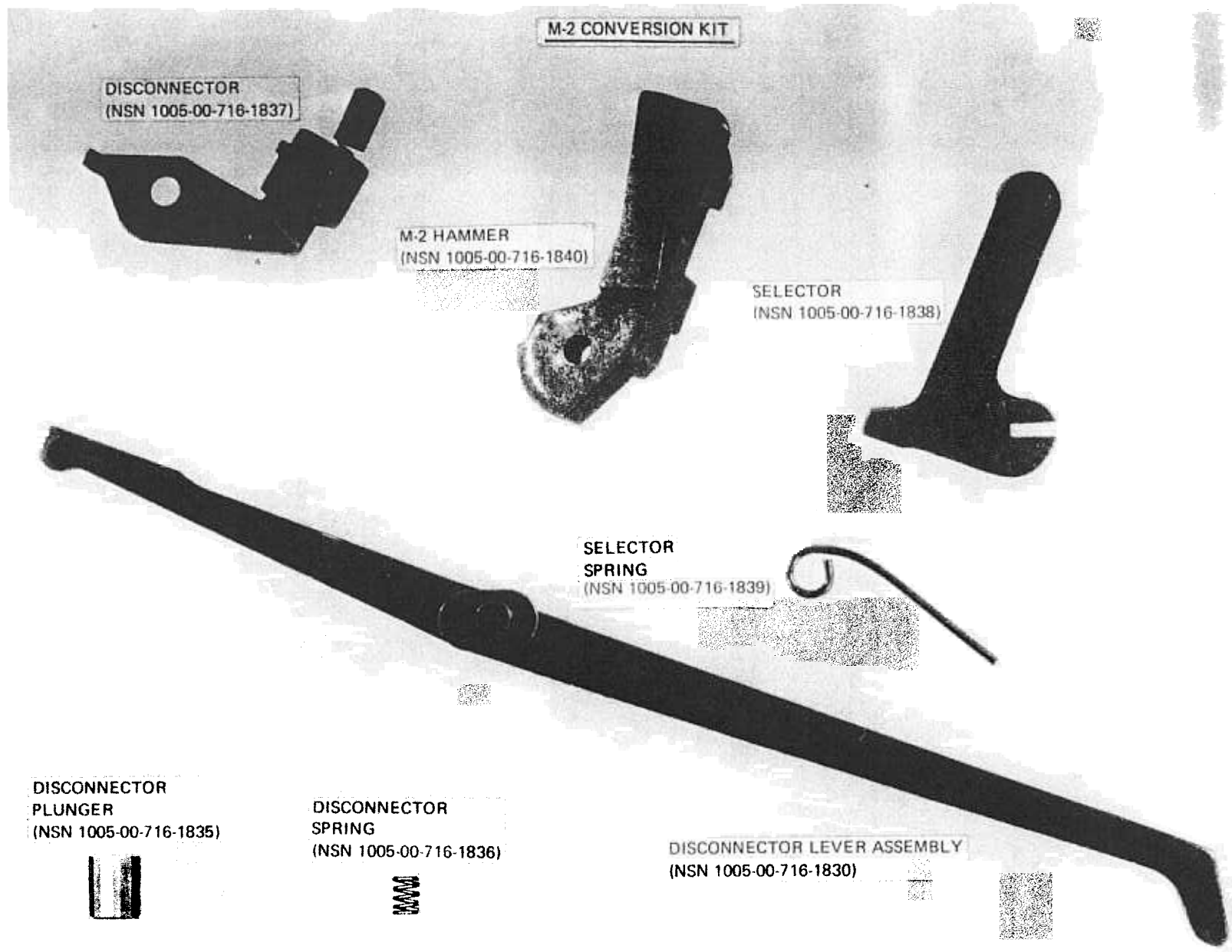
M-2 CONVERSION KIT
DISCONNECTOR
(NSN 1005-00-716-1837)
M-2 HAMMER
(NSN 1005-00-716-1840)
SELECTOR
(NSN 1005-00-716-1838)
SELECTOR
SPRING
(NSN 1005-00-716-1839)
DISCONNECTOR
PLUNGER
(NSN 1005-00-716-1835)
DISCONNECTOR
SPRING
(NSN 1005-00-716-1836)
DISCONNECTOR LEVER ASSEMBLY
(NSN 1005-00-716-1830)

FIGURE 68.

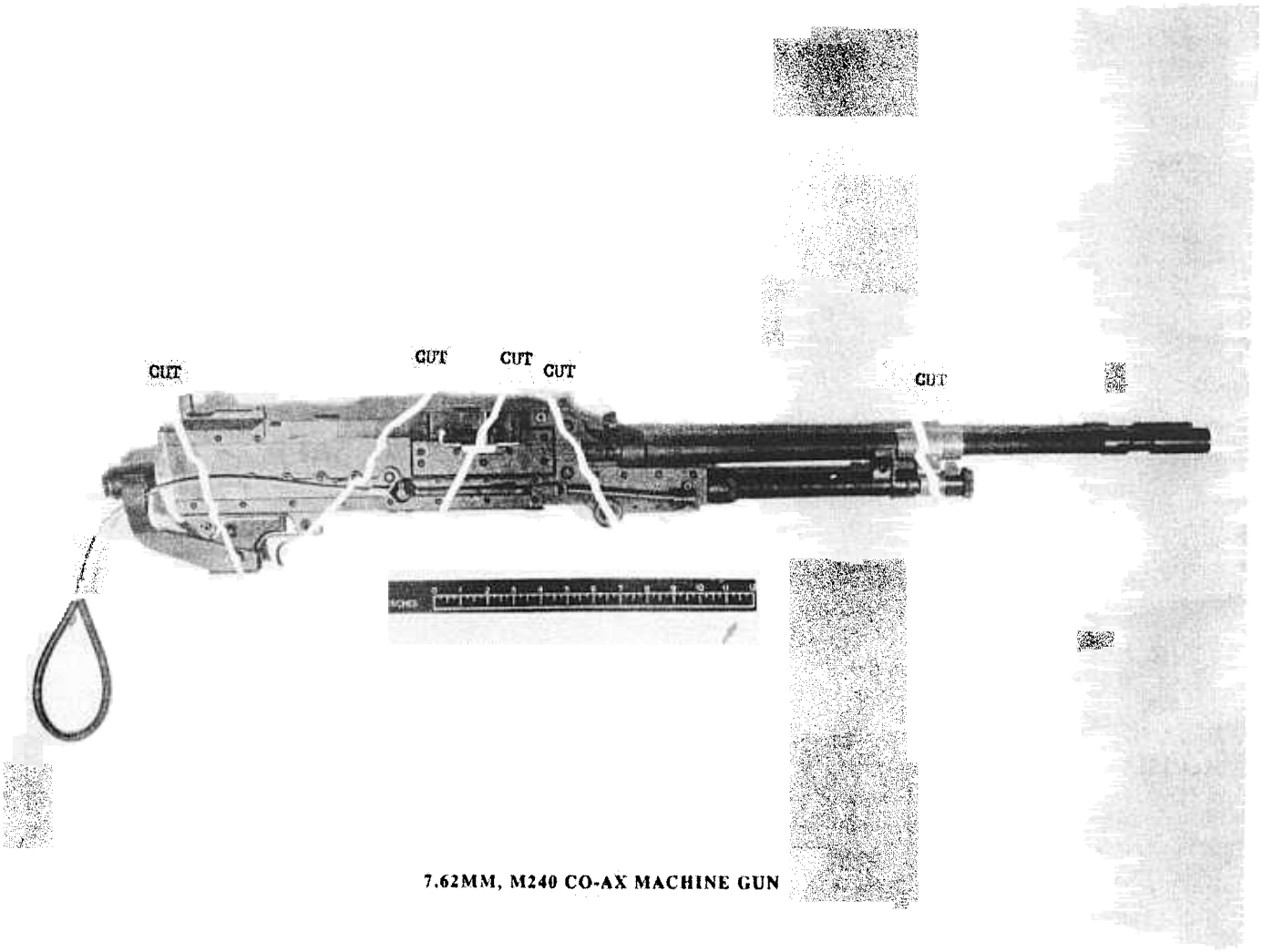

FIGURE 69. DEMILITARIZATION OF THE 7.62MM, M240 CO-AX MACHINE GUN

Demilitarization of the 7.62MM, M240 CO-AX machine gun will be accomplished by five different cuts. With the weapon laying on its left side, bolt closed, the following cuts will be made. Each cut must displace at least one-half inch of metal if demilitarization is accomplished by torch cutting:

1. The first cut will be made through the back of the rear sight mount, receiver, trigger housing assembly, and charger guide connector.

2. The second cut will be made in the middle of the receiver, cutting downward at a 45 degree angle to the left, through the receiver and the front end of the trigger housing.

3. The third cut will begin 5 inches back from the front of the receiver, cutting downward at a 45 degree angle to the left, through the rear portion of the bolt and receiver.

4. The fourth cut will begin 1 inch from the front of the receiver, cutting downward at a 60 degree angle to the right, through the bolt, barrel chamber, and the front receiver mounting hole.

5. The fifth cut will be down through the barrel and gas port bushing.

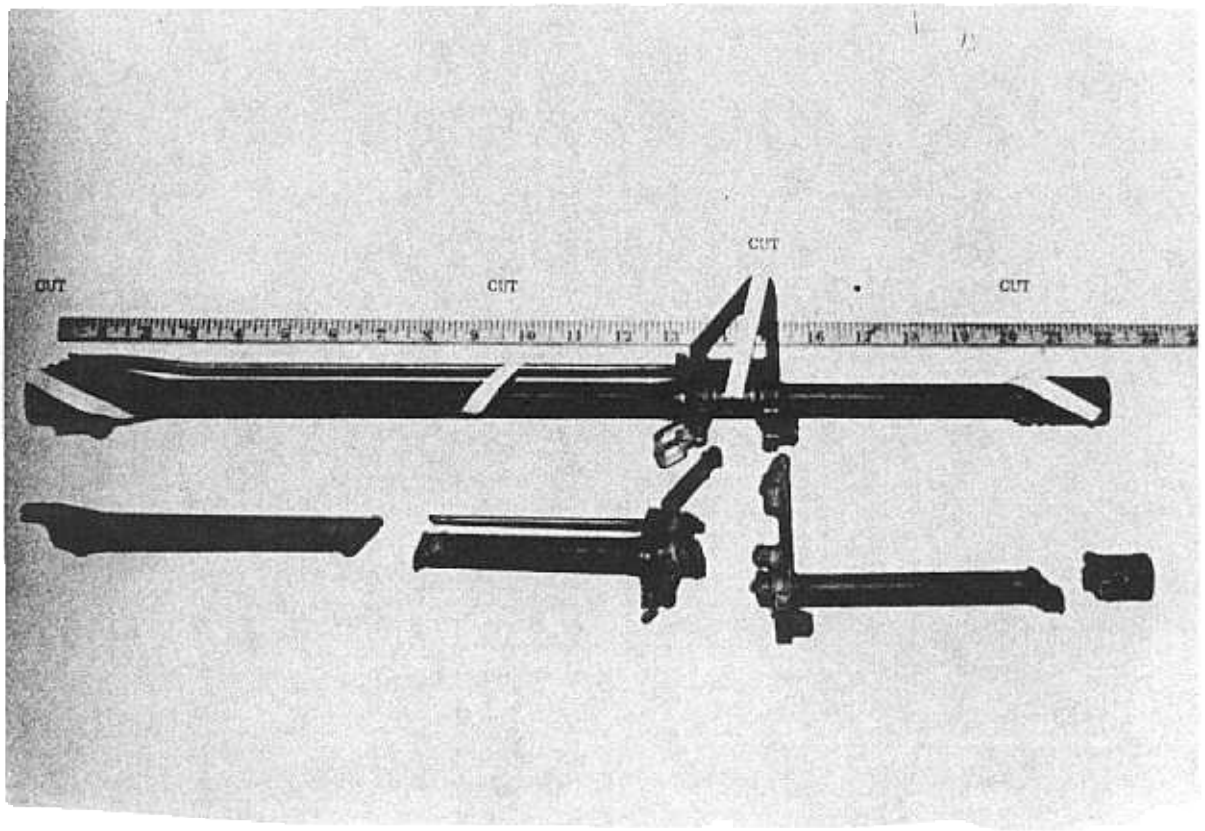

FIGURE 70. DEMILITARIZATION OF M16 RIFLE BARRELS

Demilitarization of M16 barrels will be accomplished by four different cuts. With the barrel laying on its left side, the following cuts will be made. Each cut must displace at least one-half inch of metal if demilitarization is accomplished by torch cutting:

1. The first cut will begin in the chamber, cutting to the right through the locking nut, ending where the swell of the chamber returns to the normal size of the barrel.

2. The second cut will be made 9 inches from the tip of the chamber. This cut will be at a 45 degree angle to the right.

3. The third cut will be straight through the sight mount.

4. The fourth cut will begin at the tip of the barrel cutting upward to the left at a 45 degree angle.

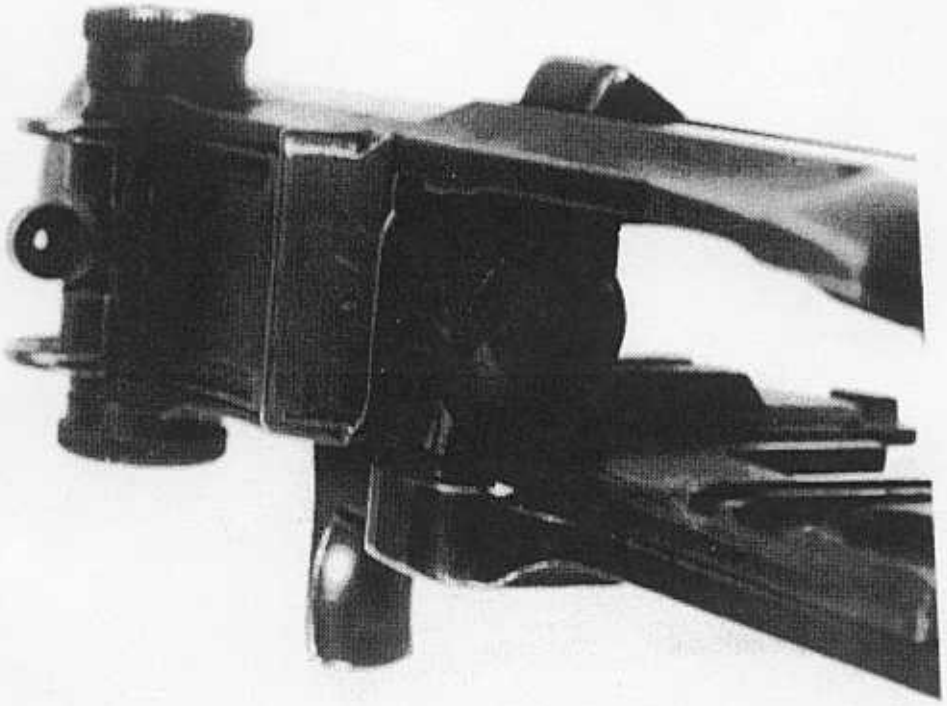

FIGURE 71. *MODIFICATION* OF M1 RIFLE, BOLT ASSEMBLY WELDING

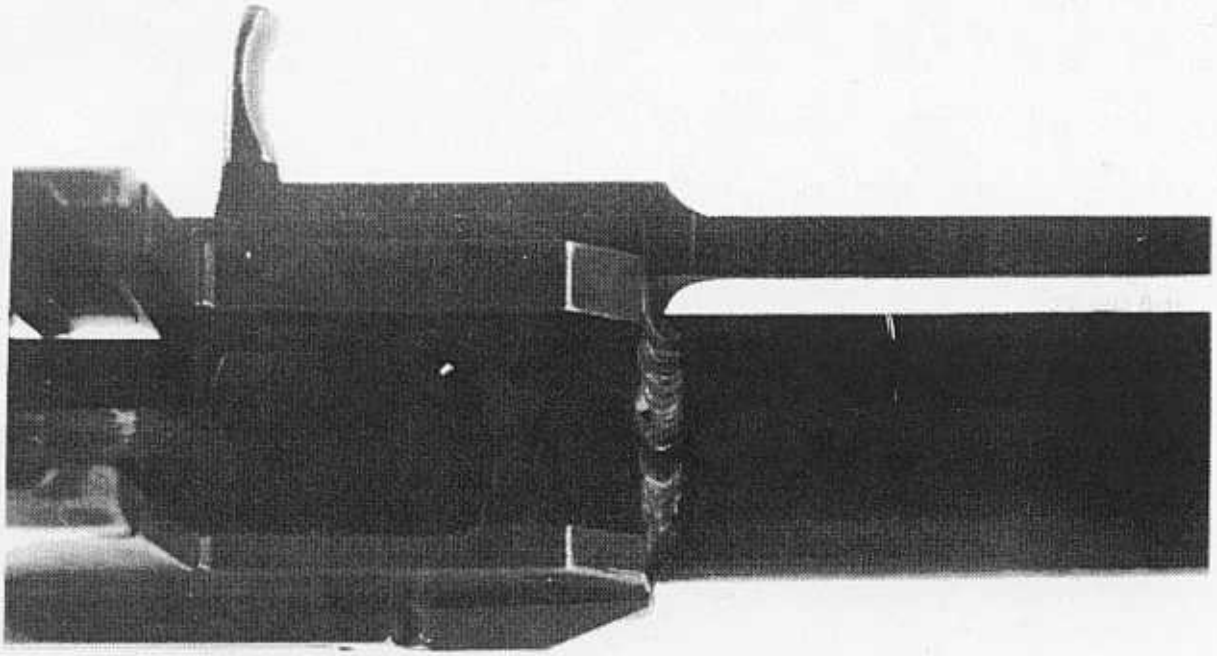

FIGURE 72. *MODIFICATION* OF M1 RIFLE, BARREL AND RECEIVER WELDING

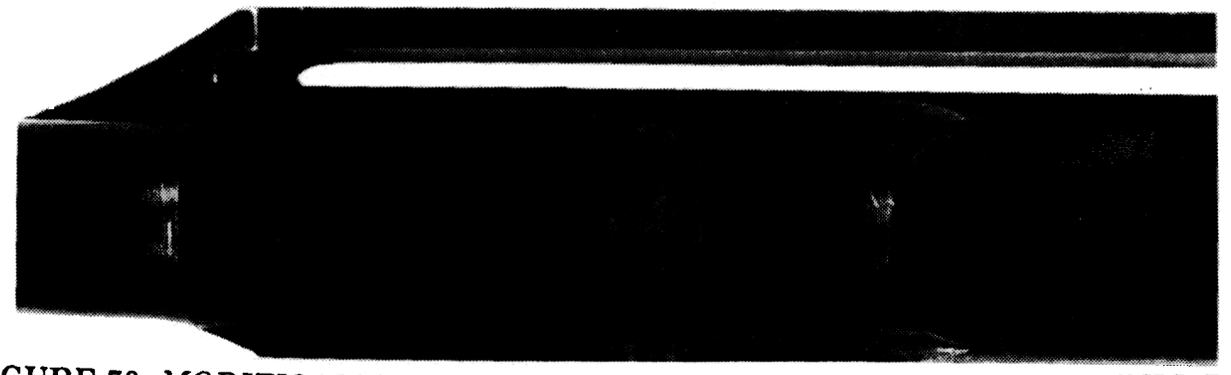

FIGURE 73. *MODIFICATION* OF M1 RIFLE, GRINDING AND WELDING DRILL ROD INTO CHAMBER AND BARREL

FIGURE 74. *MODIFICATION* OF M1 RIFLE, GRINDING AND WELDING OF GAS CYLINDER COMPONENTS

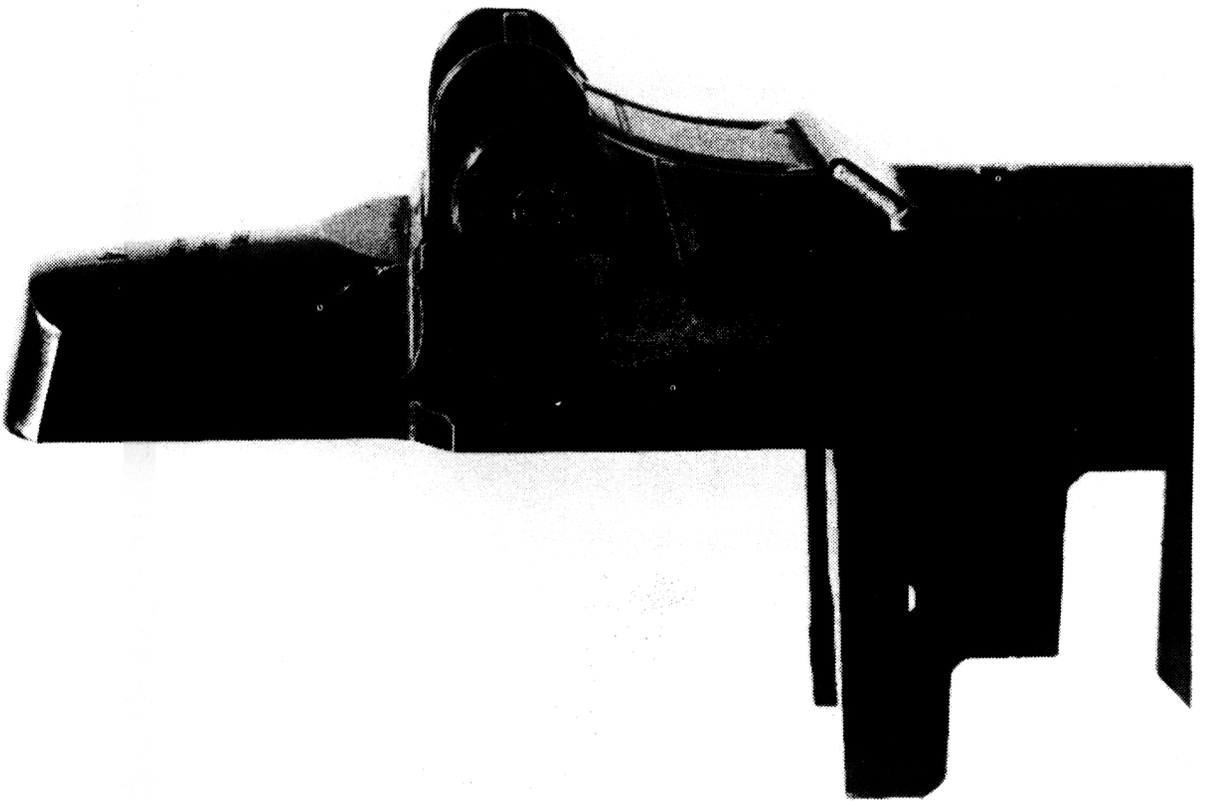

FIGURE 75. *MODIFICATION* OF M1 RIFLE, WELDING AND END MILLING OF OPERATING ROD DISASSEMBLY NOTCH ON RIGHT SIDE OF RECEIVER RAIL