Proposed End State BIC-SDR Architecture
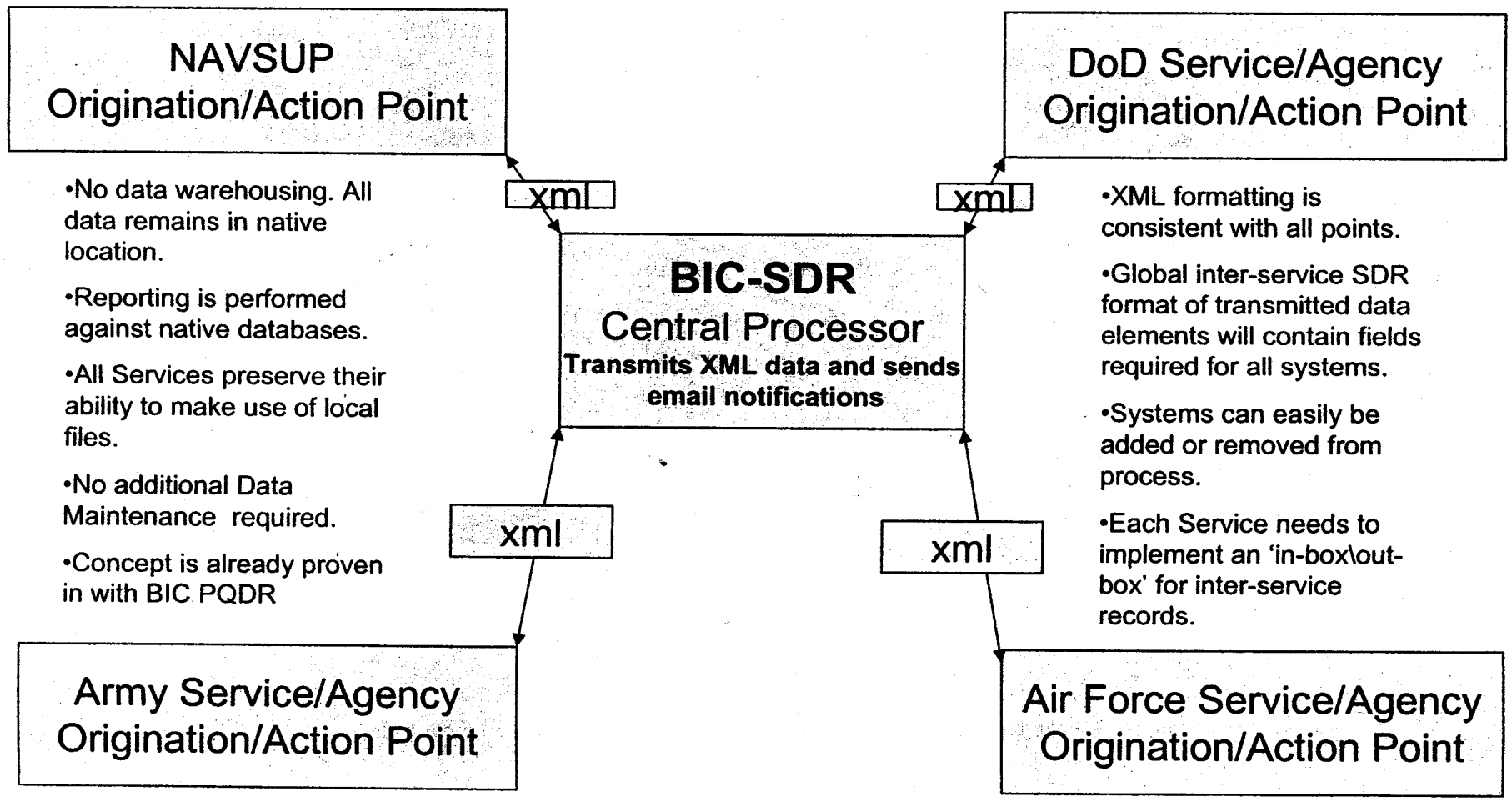
(NAVSEALOGCENDETPORTS 8/19/2003)