FEDERAL LOGISTICS INFORMATION SYSTEM

FLIS TECHNICAL PROCEDURES

DEVELOPMENT AND MAINTENANCE OF ITEM LOGISTICS DATA TOOLS

MARCH 2017

CHAPTER 1
ITEM LOGISTICS DATA TOOLS

3.1.1 Introduction

This volume describes procedures for the development, submittal, coordination, and maintenance of tools required to organize item logistics information. Included are Item Names and Federal Item Identification Guides (FIIGs), the Federal Supply Classification (FSC) system, and Department of Defense Ammunition Codes (DoDACS). The Organizational Entity Sector is in volume 7, chapter 7.1.

3.1.2 Purpose

The intent of this volume is to provide procedural guidance for the development and maintenance of Item Logistics Data Tools.

3.1.3 Types of Tools

a. Item Names: Names selected and delimited, where necessary, to establish basic concepts of items of supply. (See 3.2)

b. Federal Item Identification Guides: Self-contained documents using a machine-oriented coding format to collect item logistics data. (See 3.3)

c. Federal Supply Classification: A system of groups and classes used to classify items for logistics management. (See 3.4)

d. Department of Defense Ammunition Codes: Code numbers assigned to descriptions of ammunition, explosives, and guided missile items. (See 3.6)

e. Item Characteristics: Physical, performance, and other item-related logistics data required to describe, differentiate, and manage items of supply. (See 3.2)

f. Initiating Activity: An activity assigned the technical responsibility for the preparation, coordination, reconciliation, and maintenance of specific FIIG documents. (See 3.2)

g. Submitting Activity: Any participating activity which submits proposed catalog data directly to the Federal Logistics Information System (FLIS). The submitting activity may be the activity which originates the cataloging data or an intermediate monitoring activity.

3.1.4 Use

This volume contains instructions to develop and maintain Item Names, FIIGs, the FSC system, and DoD Ammunition Codes.

CHAPTER 2
ITEM NAMES

3.2.1 Purpose

This chapter provides rules and procedures for developing item names. The development of a single name for each type of item of supply will build a common language for logistics operations.

3.2.2 Types of Names

a. Basic Name: a noun word or noun phrase used as the first word or group of words in an item name, or an item name by itself when it establishes a single concept of an item of supply. (See 3.2.4.a)

b. Approved Item Name (AIN): the name selected as the official designation for an item of supply. (See 3.2.4.c)

c. Non-Approved Item Name (NAIN): a name given to an item of supply by a Government activity when an appropriate Approved Item Name does not exist. (See 3.2.4.d)

d. Colloquial Name: a commonly used, generic name, or trade name referenced to an Approved Item Name to assist in assigning names to items of supply. (See 3.2.4.e)

3.2.3 Use

The guidelines and procedures presented in this chapter will be used to develop item names in a uniform manner. Application of these rules will support the Federal Supply Classification system for grouping like items for management purposes and the Federal Item Identification Guides structure for grouping like items for identification purposes. Accordingly, Logistics Information Services shall collaborate revised item name actions with the initiating activity responsible for the FIIG and with the item manager(s) responsible for the items in the affected FSC(s).

3.2.4 Item Name Development

The primary concern in the development of a new item name and its delimitation is producing the most accurate designation and description for the item concept in the least number of words needed to distinguish it from every other item concept. Use only part names or NAINs in the preparation of reference or partial method item identifications when no Approved Item Name exists. See appendix 3-2-A thru I to this chapter for samples.

a. Basic Names and Modifiers. A basic name is either a basic noun word or a basic noun phrase. Use as an item name only when it establishes a single concept of an item or as the first word or group of words in an item name, followed in inverted sequence by the least number of modifiers necessary to establish a single concept of an item.

(1) Use of the Most Specific Word as a Basic Name. Only a noun word or a noun phrase which conveys the most specific basic concept of an item shall be used as a basic name.

Acceptable	Nonacceptable
CHAIR	FURNITURE
SHOES	FOOTWEAR
INK	WRITING FLUID

(2) Use of the Preferred Synonym. Use the basic name most commonly acceptable in technical or commercial practice when two or more nouns are synonymous. The other name(s) shall be cross-indexed to the basic name selected. (See 3.2.4.e)

Acceptable	Nonacceptable
OVERSHOES	ARCTICS
DRESSER	BUREAU

(3) Use of an Indefinite or Nonlimiting Word in a Basic Name. The following shall never be used as a basic noun but may be used as the first or last word of a basic noun phrase:

ACCESSORY
ACID
APPARATUS
ASSEMBLY
ASSORTMENT
ATTACHMENT
COMPOUND
DEVICE
ELEMENT
ELIXIR
EQUIPMENT
FLUID
GROUP
INJECTION
INSTRUMENT
KIT
LIQUID
MACHINE
MECHANISM
MIX
MIXTURE
MODULE
OIL

OUTFIT
PLANT
POWDER
SECTION
SET
SHOP
SOLUTION
SUBASSEMBLY
SUSPENSION
SYSTEM
TABLETS
TACKLE
TOOL
UNIT
VEHICLE

(4) Use of the Singular Form. The basic name shall be written in singular form, except as follows:

(a) Where the only form of the name is plural.

Examples: SCISSORS
TONGS
TROUSERS

(b) Where the nature of the item requires the plural form.

Examples: CLIMBERS (pair)
BEANS WITH PORK
SHOES (pair)

(5) Use of a Foreign Word or Phrase in a Name. A foreign word or phrase shall not be used in a name, except where such foreign term is considered to be more expressive than the English term and when the foreign term has received preferential use to the exclusion of its English equivalent.

Acceptable	**Nonacceptable**
PACKSADDLE	APARENJO
MACHETE	CUTLASS, HEAVY

(6) Use of a Trade-Marked or Copyrighted Name. A trade-marked name or copyrighted name shall not be used as a basic name or modifier except as applied to items controlled by the manufacturer who controls the

trade-mark or copyright. Even in this situation, a trade-marked name or copyrighted name shall be used only where the technical name for the item is generally considered to be difficult to pronounce or spell.

Acceptable	**Nonacceptable**
CAMERA	KODAK
REFRIGERATOR	FRIGIDAIRE
DECAL	DECALCOMANIA

NOTE: The submitting activity shall specifically justify to the Defense Logistics Agency, Logistics Information Services, Directorate of Logistics Information Management, the use of a trade-marked or copyrighted name.

(7) Use of a Basic Name for a Container. Use the name of a container, as a basic name, to indicate an empty container which is of itself an item of supply used for shipping or distribution purposes.

Examples: BOTTLE
BARREL
CAN
DRUM
REEL
SPOOL

(8) Use of Names of Containers in Basic Names of Items Which Are Not Containers. Use a basic noun phrase when the item is not a container but the name of the item involves the use of a noun which ordinarily would designate a container.

Acceptable	**Nonacceptable**
JUNCTION BOX	BOX, JUNCTION

(9) Use of Abbreviations.

(a) Never abbreviate the basic name or modifier in an Approved Item Name, except as follows:

ACS	- American Chemical Society
CBR	- Chemical, Biological, and Radiological
DDT	- Dichloro-diphenyl-trichloro-ethane
EAM	- Electrical Accounting Machine
NF	- National Formulary
NPH	- Neutral Protamine Hagedorn
TK	- Turn Knob
USP	- United States Pharmacopeia
VDRL	- Venereal Disease Research Laboratory

(b) Use conventional abbreviations in names of culture media and in mixtures used to prepare culture media (e.g., S1S1 AGAR; ATS MEDIUM; EVA BROTH)

(10) Use of Hyphens, Conjunctions, and Prepositions in a Name. Form a hyphenated noun word or a basic noun phrase if a basic name or a modifier consists of a combination of the names applicable to two or more items. Join the applicable names by a conjunction or preposition. Never use "OR" as a conjunction. Never use "/" either.

Examples: RECORDER-REPRODUCER
CORK AND TASSEL
PORK WITH GRAVY
BEEF AND CORN
HOOK AND EYE
BENDING MACHINE, PIPE AND CONDUIT
BIT, HORSE-MULE

(11) Construction of a Basic Noun Phrase. Use a basic noun phrase when the word cannot be delimited to establish a basic concept of the item. In this situation, the use of the inverted sequence with a basic noun followed by a modifier would lead to a misunderstanding of the basic concept of the item. It is therefore necessary to use the words in a straight-forward sequence as a basic noun phrase to convey a clear basic concept of the item.

Acceptable	**Nonacceptable**
CHART BOARD	BOARD, CHART
SLIDE RULE	RULE, SLIDE

(12) Use of Names of Materials in Basic Names. Use a basic noun phrase when the item is not a material but the name of the item involves the use of a noun which ordinarily would designate a material.

Acceptable	1.1.1.1 **Nonacceptable**
SOLDERING IRON	IRON, SOLDERING
BUTCHER'S STEEL	STEEL, BUTCHER'S

(13) Use of Basic Name Modifiers.

(a) Use modifiers consistently on all Approved Item Names (AINs) for functionally similar Basic Names to eliminate overlap and confusion of AIN applicability.

Acceptable	**Nonacceptable**
EXTINGUISHER, FIRE EXTINGUISHER, FIRE, CARBON DIOXIDE and EXTINGUISHER, FIRE,	EXTINGUISHER, FIRE and EXTINGUISHER, FIRE, CARBON DIOXIDE

Acceptable	**Nonacceptable**
DRY CHEMICAL	

(b) Use modifiers according to the following preferences:

(1.) Modifiers indicating what an item is (its shape, structure, or form).

(2.) Modifiers indicating what an item does (its function).

(3.) Modifiers indicating the application of an item (what is it used for).

(4.) Modifiers indicating the location of an item (where is it used). (e.g., AIRCRAFT, AUTOMOTIVE, etc).

EXCEPTION: Do not add modifiers in order to conform with these rules if the addition of such a modifier would result in an item name that would conflict with the name commonly used in industry and Government. In this case, delimit each item name to indicate a unique concept of an item.

Acceptable	**Nonacceptable**
DRESSER An article of bedroom furniture, the top of which is less than 40 inches from the floor. It usually has full length drawers and a mirror.	DRESSER, HOUSEHOLD (with or without delimitation)
DRESSER, CONTACT POINT A flat, thin strip of flexible material, treated on both sides with a coating of the same abrasive grain. Excludes: BURNISHER, CONTACT, HAND and STRIP ABRASIVE, DENTAL.	DRESSER (without delimitation)
PENCIL Excludes: PENCIL, MECHANICAL and CRAYON, MARKING.	PENCIL, NONMECHANICAL (with or without delimitation)
PENCIL, MECHANICAL An item for writing or other marking use in which the lead is replaceable.	PENCIL (without delimitation)

(c) The first modifier shall serve to narrow the area established by a basic name concept. All such first modifiers express the same type of characteristic in that position for the same basic name concept. For a multi-concept basic name, the type of characteristic expressed by the first modifier may vary for the different concepts.

(d) So far as practicable, all second modifiers applying to a particular basic name plus a first modifier shall express the same type of characteristic used following the same basic name and first modifier combination. Second modifiers shall express a different type of characteristic from that expressed by the first modifier.

Examples: SAW, HAND, CROSSCUT
SAW, HAND, RIP
RESISTOR, FIXED, COMPOSITION
RESISTOR, FIXED, FILM

(e) Logistics Information Services will allow no more than two modifiers to form an item name except upon written justification or prior approval for drugs/chemicals or specific USDA requirements.

(f) A word directly qualifying a modifying word shall precede the word it qualifies, thereby forming a modifying phrase.

Examples: CAMERA, MOTION PICTURE
BASKET, WOVEN WIRE, FRYING

(g) Possessive Modifiers.

(1) A possessive modifier for a noun in the singular form shall also be in the singular form.

Examples: COAT, MAN'S
DRESS, WOMAN'S

(2) A possessive modifier for a noun having only the plural form will also be in the plural form.

Examples: TROUSERS, MEN'S
SLACKS, WOMEN'S
COVERALLS, MECHANICS'

(h) Professional, Trade or Occupational Modifiers. Use these modifiers only when the item concept can be expressed better.

Acceptable	**Nonacceptable**
WRENCH, OPEN END, FIXED	WRENCH, ENGINEER
VISE, BLACKSMITH'S	VISE, LEG

(i) Do not use material as a modifier to a basic name or noun phrase since material is an item characteristic.

Acceptable	**Nonacceptable**
TUBE, METALLIC	TUBE, BRASS
ROD, NONMETALLIC	ROD, HARD RUBBER

(14) Development of Names for Drugs and Chemicals. Form the item name for a drug or chemical in accordance with the rules specified below. Modify the basic names for drugs and chemicals where necessary to achieve differentiation between grades, qualities, or compositions.

(a) A basic name for a drug or chemical of medicinal grade shall conform to Federal regulations or the English title as set forth in the United States Pharamacopeia, National Formulary, United States Adopted Names, AMA Drug Evaluation, Reagent Specifications of the American Chemical Society or to general commercial practice, in that order or priority. Rearrange the basic name or first part of the basic noun phrase to indicate the principal ingredient which produces the therapeutic effect, followed by the remaining active ingredients in alphabetical sequence. Federal regulations may allow for broad names for items such as soaps and shampoos which have medicinal application.

(b) A basic name for a chemical or nonmedicinal grade shall conform to the English title as set forth in the Reagent Specifications of the American Chemical Society or to the extent that the basic noun or noun phrase shall be the name of the principal ingredient.

(c) Chemically significant symbols when used in connection with chemicals, such as those for alpha, beta, dextro, gamma, inactive, levo, meta, ortho, para, and symmetrical, shall be written in lower-case letters a-, b-, d-, g-, i-, l-, m-, o-, p-, and sym.

Acceptable	**Nonacceptable**
a-NAPHTHOL, REAGENT	A-NAPHTHOL, REAGENT
sym-DIO-o-TOLYL	SYM-DI-O-TOLYL
THIOUREA, TECHNICAL	THIOUREA TECHNICAL

(d) Position numerals included in chemical item names shall not be spelled out.

Acceptable	**Nonacceptable**
2-MERCAPTOBEN-ZOTHIAZOLE, TECHNICAL	TWO-MERCAPTO BENZOTHIAZOLE, TECHNICAL

(e) When developing an item name for an inorganic chemical, the cationic part of the basic name shall include suffixes such as -ic or -ous to indicate the valence state of the chemical where such chemical occurs in both forms.

(f) Defined Modifiers for Drugs and Chemicals. Use the following modifiers to indicate the appropriate grade or variation of a drug or chemical as applicable, and require that it be the last modifier in the item name. If one of these modifiers is the third modifier in an item name, The Directorate of Logistics Information Management, Logistics Information Services will authorize this without specific approval.

(1.) USP: denotes the quality which conforms to the specifications established in the Monographs and Adjuncts and Clinical Reagents sections of the Pharmacopeia of the United States. Use this modifier in the item name of every drug item of this quality.

(2.) NF: denotes the quality which conforms to the specifications established in the Monographs section of the National Formulary. Use this modifier in the item name of every drug item of this quality.

(3.) MODIFIED: Indicates that a variation exists in the formulation as established by the United States Pharmacopeia, National Formulary, or recognized professional and industry standards.

(4.) ACS: denotes the quality of "reagent" chemicals which meets or exceeds the specifications established and published by the Committee on Analytical Reagents of the American Chemical Society. The description of a chemical which exceeds the ACS standard of purity shall include a specific statement as to the difference.

(5.) ANALYZED REAGENT: denotes high quality chemicals which are suitable for exacting analytical work and which bear a label giving a statement of the maximum percentage of the important impurities present. Generally, analyzed reagent grade is comparable to ACS grade for those chemicals where an ACS standard does not exist. ANALYZED REAGENT shall be the designation for all commercial listings of reputed "reagent" chemicals and "CP" chemicals which include an analysis of impurities in the identification label, provided they are not ACS grade. Also, ANALYZED REAGENT shall be the designation for chemicals which meet the specifications of "reagent" chemicals as found in the Non-monographed sections of the United States Pharmacopeia or the National Formulary. When chemicals of analyzed reagent grade exceed the normal impurities limitations for this grade, their identification must be expanded to indicate any significantly lower impurity limits. Normally, trade identifies these items with statements such as "Low in Iron" or "Free from Arsenic."

(6.) REAGENT: denotes "reagent grade chemicals which do not bear a label stating the percentages of the important impurities present". Reagent grade chemicals have limited use in analytical work because of the uncertainty as to the kind and amount of impurities present. Laboratories use these chemicals extensively in synthesis and in certain analytical procedures where the inherent impurities are not critical to the intended reaction.

(7.) TECHNICAL: denotes a quality of chemicals generally used for industrial, solvent, and manufacturing applications. Generally, the manufacturer does not employ specific processes to limit all the impurities, aside from the normal precautions which are taken in the manufacturing process. A technical chemical may be specifically processed to reduce specific impurities so as to suit the chemical to a given

industrial application. In such cases, the identification of the items must be further expanded to indicate specific impurities limitation.

(8.) PHOTOGRAPHIC: denotes a special grade of chemical of such quality that limits impurities known to be harmful to photographic processes to safe quantities and restricts inert impurities to amounts not reducing the strength of purity of the chemicals below the requirements. Manufacturers package these chemicals for unit application in specifically designed containers to ensure against contamination and deterioration.

(9.) STANDARD SAMPLE: denotes a material resembling as closely as possible in chemical and physical nature the material with which the technical chemist expects to deal, thus eliminating the necessity of additional research into many variables. Manufacturers analyze standard samples by a sufficient number of methods and analyses to establish the average composition of the material with considerable certainty. Analyzing a sample along with the material causes the sample to behave like the stock material. Analyzing the standard sample and the material at the same time (and under practically identical conditions), wide divergence from the determinations made by research chemists on the standard sample indicates at once that the stock material deviates from the standard sample. National Bureau of Standards miscellaneous Publication 241, or its superseding document, lists the names of materials used to develop item names using the modifier STANDARD SAMPLE. Do not use this modifier unless the material has a National Bureau of Standards sample number.

(g) Use of Modifiers Indicating Degree of Hydration. The conditions listed below may influence the use of modifiers for drugs and chemicals. We recognize the degree of hydration by the last part of a formula which indicates that the compound contains a specific number of water molecules (H2O) or none. Submit the chemical formula with the proposed name.

(1.) Modifiers describing the degree of hydration shall precede the last modifier, if any.

(2.) Do not express the degree of hydration when a modifier already implies hydration (e.g., CRYSTALS).

(3.) Do not add modifiers to indicate degree of hydration to item names established by Federal regulations or to items containing USP or NF as modifier.

(4.) If the formula indicates that there are not molecules of water in the compound, and the material occurs in both anhydrous and hydrous forms, include the modifier ANHYDROUS in the item name.

(5.) Do not add the modifier ANHYDROUS after a modifier indicating dehydration (e.g., DESICCATED).

(15) Development of Names for Dyes.

(a) The item name for a dye having a color index number or a foreign prototype number shall consist of the basic name Dye followed by the name of the dye assigned to the index or prototype number.

Examples: DYE, BISMARK BROWN G
DYE, INDATHRENE BLUE GCD
DYE, PONTACYLE CARMINE 2B

(b) The item name for dyes with no code number designation shall consist of the basic name DYE followed by the color modifier of the using activity. When an activity submits a color designation as a modifier for DYE, they must also send in a statement giving the chemical name for the dye. The Directorate of Logistics Data Management, Logistics Information Services, will eliminate duplicate item names by making a comparison of chemical names. Logistics Information Services does not publish chemical names for dyes in the Alphabetic Index of Names, Section A, Cataloging Handbook H6, Federal Item Name Directory for Supply Cataloging, because such information is normally confidential to the respective manufacturers.

Examples: DYE, DARK BROWN

(c) The item name for a dye mixture (mixture of two or more single dyes) shall consist of the basic name DYE MIX followed by a modifier indicating the color produced by the mixture.

Examples: DYE MIX (1), SEAL BROWN

(16) Development of Item Names for Meat and Poultry. Form the item name for a meat or poultry product in accordance with the rules specified below:

(a) Structure the item name for a meat or poultry item in accordance with the Meat and Poultry Act and Regulations of Food Safety and Inspection Service, USDA.

(b) Meat and poultry item name submittals shall contain a justification statement indicating the name request is in accordance with USDA structure requirements and shall cite the applicable specifications, if available.

(c) In order to comply with USDA labeling requirements for meat and poultry food products, the number of modifiers is not limited.

(17) Development of Names for Mobile Units.

(a) The basic name for a mobile unit equipped for a specific function shall indicate the function, not the mobile unit.

Acceptable	**Nonacceptable**
DECONTAMINATING APPARATUS	DECONTAMINATING TRUCK
MACHINE SHOP	MACHINE SHOP SEMITRAILER

EXCEPTION: Mobile units in which the specific function is the governing characteristics of the design may have the name of the mobile unit as the basic name.

Examples: TRUCK, FIREFIGHTING
TRAILER, DUMP

(b) If the equipment contains mounted special equipment or apparatus necessary to perform a specific function, reflect this broad type of transport with one of the modifiers for mobile units.

Examples: BAKERY PLANT, TRAILER MOUNTED
TEXTILE REPAIR SHOP, SEMITRAILER MOUNTED
DECONTAMINATING APPARATUS, POWER DRIVEN, TRUCK MOUNTED

EXCEPTION: Mobile units in which the specific function is the governing characteristic of the design.

Examples: TRUCK, FIREFIGHTING
TRAILER, DUMP

(c) When the equipment design function requires some form of mobility, either vehicular mounted or self-propelled, one of the modifiers shall reflect the broad type of transport for which mounted or the source of mobility (prime mover) data.

Examples: SCRUBBING MACHINE, PAVEMENT, TRUCK MOUNTED
CLEANER, VACUUM, SELF-PROPELLED

A term such as SEMITRAILER MOUNTED, TRACTOR MOUNTED, TRUCK MOUNTED, etc., when used as a modifier in the item name for a mobile unit, shall indicate that when the equipment is removed from the mounting, there remains a complete semitrailer, tractor, trailer, truck, or chassis thereof. The term SELF-PROPELLED shall indicate that the source of mobility (prime mover) is (1) a designed part of the equipment, or (2) a conventional vehicle modified to the extent that the designed purpose of the destroyed vehicle serves as a source of mobility for the equipment.

(d) When the equipment design is for a specific transport mounting but the transport is not a part of the item of supply, the name may reflect the type of transport.

Examples: SHOP EQUIPMENT, WELDING, TRUCK MOUNTED

(e) Do not reflect the broad type of transport in an item name for equipment such as pumps, compressors, or generator sets, which are not normally mobile but which may be mounted on some form of vehicle. Reflect this type of mounting in the appropriate FIIG.

b. Delimitations.

(1) Types of Delimitations. A delimitation shall be accomplished by one or a combination of the following methods, depending upon the degree of demarcation necessary for uniqueness in the basic concept name or item name as described in this subsection:

Definition
Exclusion of related name
Inclusion of synonymous names
Restriction of use
Cross-referencing to related names

(a) Delimitation by Definition. Develop a single definition for each basic concept name and item name except for the following: (1) a subsistence, drug, or chemical (basic, not application) item when the name appears in an official standard recognized industry-wide or the name completely defines the item; (2) a technical term contained in an official standard or technical manual recognized industry-wide; or (3) an item name consisting of a basic concept modified by subsistence, drug, chemical, or technical terms as specified in exemptions (1) or (2) above.

(1.) Each definition shall clearly explain the characteristics involved in the item concept to which it applies and shall serve to distinguish the item concept from other similar or closely related concepts.

(2.) When an item name includes a basic concept name, define the item in terms of the basic concept name. A basic concept name is one that delimits and identifies a particular meaning for that name when other meanings are possible or known, such as Lens. There are camera lenses, flashlight lenses, ophthalmic lenses, and optical lenses. Define and number the basic concepts.

Examples: Resistor

l. (Electrical) A device, the primary purpose of which is to introduce opposition to the flow of current in an electrical circuit.

Acceptable	**Nonacceptable**
RESISTOR (1), VARIABLE, NONWIREWOUND, NONPRECISION	RESISTOR, VARIABLE, NON WIRE WOUND
A resistor in which a sliding or rolling contact moves over an exposed area of the resistive element to change the ohmic value of the output. The functional tolerance (linearity), is given, if the output is greater than plus or minus 1 percent on linear outputs. Specified outputs such as sine, cosine, tangent, etc.,	An item having electrical resistance whose primary purpose is to limit the flow of current in either direction in an electrical circuit, designed to allow a nominally continuous variation in the ohmic value of the resistive element.

Acceptable	**Nonacceptable**
shall be considered to be precision. For items having manually positioned taps designed to be set and fixed prior to use, see RESISTOR, ADJUSTABLE. For items with step by step variation, see RHEOSTAT and RESISTOR, STEP BY STEP. For tandem mounted items designed to function together as an attentuator (and rated accordingly), see ATTENUATOR, VARIABLE. Excludes RESISTOR (1), VARIABLE, WIRE WOUND, NONPRECISION; RESISTOR (1), VARIABLE, NONWIRE WOUND, PRECISION; and RESISTOR (1), VARIABLE, WIRE WOUND, PRECISION.	

(3.) When an item name does not include a basic concept name, do not define the item name in terms of the basic name.

Example: When PLATE is undefined.

Acceptable	**Nonacceptable**
PLATE, PHOTOGRAPHIC A sheet of glass, metal, or stiff plastic bearing a silver salt emulsion coating which, when exposed to a light source and a chemical treatment, produces a visible black and white or color image. It may be designed in size and form to be projected.	PLATE, PHOTOGRAPHIC A plate used in photographic work.

(4.) Do not define an item name in its own terms. Do not include the basic name or modifier in the definition except when the name incorporates a numbered basic name concept. (see paragraph 3.2.4.b(1)(a)(2))

(5.) Separate Approved Item Names referred to within the definition by semicolons (including one before the conjunction "and").

(6.) Use the term "and the like" instead of "etc." or "et cetera".

(7.) When a U.S. dimension is included, its metric equivalent shall follow in parentheses.

(8.) Limit capital letters in definitions to the initial letter of the first word of a sentence, all letters of an Approved Item Name, the first letter of a basic name concept, any actual proper noun, and words reflecting a

title (e.g., Screw Thread Standards for Federal Services). Present colloquials and Nonapproved Item Names used within a definition in lower-case letters.

(9.) Do not use abbreviations and acronyms in definitions except as noted in paragraph 3.2.4.a(9)(a). Always use abbreviations in "number" to show a screw size (e.g., No. 10).

(10.) Spelling must be correct in all definitions.

(b) Delimitation by Exclusion. Use the method of exclusion as an appropriate form of delimitation to limit the concept of a basic name or an item name to indicate that certain closely related names do not fit the concept which might otherwise be for consideration in the concept. In the delimitation of a basic name, use an exclusion only as a supplement to a definition.

Examples: CHISEL, RIVET BUSTER, HAND
Excludes CHISEL, SIDE CUTTING, HAND

(c) Delimitation by Inclusion. Use the method of inclusion as an appropriate form of delimitation to limit the concept of a basic name or an item name to indicate that certain closely related names do fit the concept which might otherwise not be for consideration in the concept. In the delimitation of a basic name, use an inclusion only as a supplement to a definition.

Example:

Bottle

A hollow vessel, usually constructed of glass or other transparent material in various shapes. It usually has a neck which is smaller than the body and a narrow mouth for a stopper or other type closure. Includes vials. Use a type modifier, such as "dropper".

(d) Delimitation by Restriction of Use. When a basic name limits one or more specific item concepts, an appropriate restrictive word or phrase shall delimit each such item concept. Never use the parenthetical delimitation as a part of the item name.

Examples: Generator (Electrical)
Generator (Chemical)
Hammer (Mechanical)
Rule (Printing)
Propeller (Aircraft)

(e) Delimitation by Cross-Reference to Related Names. When a close relationship exists between two or more Approved Item Names, use the term "see" or "see also" for identification of the related Approved Item Names before making a final selection of the appropriate AIN.

Examples: RESISTOR, VOLTAGE SENSITIVE
See also RECTIFIER, METALLIC and
RESISTOR, CURRENT REGULATING.

(f) Format for Delimitations: The delimitation follows the Approved Item Name in paragraph form.

Examples:

AMPLIFIER ASSEMBLY

SCREW, MACHINE

c. Approved Item Names (AINs). Designate item names consisting of a basic name with a modifier(s) and a delimitation, where applicable, as Approved Item Names upon final approval and Item Name Code assignment by the Directorate of Logistics Information Management, Logistics Information Services. Paragraphs 3.2.5 , 3.2.6 and 3.2.7 respectively contain the procedures for submittal, coordination, and approval of proposed item names.

(1) Indexing of Approved Item Names. Index Approved Item Names for use in the descriptive method of item identification to the applicable FIIG number in the Alphabetic Index of Names, Section A of the Federal Item Name Directory (Cataloging Handbook H6). (See 3.2.7.a)

(2) Common Usage. Use the most commonly used names by Goverment and industry when two or more names are applicable to an item. Cross-index the other name(s) to the selected name. (See 3.2.4.e)

(3) Use of Capital Letters. Approved Item Names shall always appear printed in capital letters except in certain drugs and chemicals. (See 3.2.4.a(14)(c))

(4) Use of a Comma in an Approved Item Name. A comma shall be used:

(a) To separate a modifier from a basic name or from a preceding modifier:

Examples: CAMERA, MOTION PICTURE
SAW, HAND, CROSSCUT

(b) When an item name contains three or more principal components.

Examples: ASPIRIN, PHENACETIN, AND CAFFEIN TABLETS
BENZOCAINE, SODIUM BORATE, AND METHOL TABLETS

EXCEPTION: When an item name includes a preposition such as WITH in the item name.

Examples: BEEFSTEAK AND POTATOES WITH GRAVY, CANNED
BEEF AND MACARONI WITH CHEESE SAUCE, CANNED

(5) Use of Parentheses in an Approved Item Name. Do not use parentheses to enclose any portion of an Approved Item Name except in certain drugs and chemicals.

Examples: N-(1-NAPTHYL)-ETHYLENEDIAMINE DIHYDROCHLORIDE, ANALYZED REAGENT

d. Non-Approved Item Names (NAINs). When no appropriate AIN exists for an item, the designated name is a Non-Approved Item Name. (See 3.2.2.c) INC 77777 represents NAINs. The name may be a part name given by a manufacturer, but its structure shall conform to the guidelines used in the development of Approved Item Names (see 3.2.4.a and 3.2.4.c) except as noted below:

(1) Use of Punctuation. Do not put a space after any comma in a NAIN. Use the period only before or between numeric characters.

(2) Duplication of Part Names. Sometimes we use two or more part names to express one item concept because we base the reference method of item identification upon the manufacturer's code and part number and not upon the name of the item. Take the following steps to delete duplications and to establish a single item name for each different item concept.

(a) An activity may select one of the names, or develop a more descriptive name.

(b) By mutual agreement, two or more Government activities may select one name which represents an item in each of their supply systems.

e. Colloquial Names. (See 3.2.2.d) You may submit alternate or common usage names as well as cancelled AINs as colloquial names. Colhoquial name structure may or may not follow format guidelines for Approved Item Names. Form these in the manner best designed to assist in AIN selection. Usually colloquial names do not reflect the inrerted sequence of the referenced AIN.

(1) You may submit colloquial Names as part of an Item Identification (II) by using MRC CLQL (administrative MRC covered in General Information of the (FIIG) or the formalized DD Form 180. (See appendix 3-2-B)

(a) No II colloquial submittal is automatically entered in the data base. Logistics Information Services validates the submittal manually prior to entering it into the Cataloging Handbook H6.

(b) Logistics Information Services will forward approved colloquial submittals to the submitting activity with the effective date. Return disapproved colloquial submittals to the submitting activity with justification comments.

(2) Logistics Information Services publishes Colloquial Names submitted and approved in the Alphabetic Index of Names, Section A, Cataloging Handbook H6, of the Federal Item Name Directory for Supply Cataloging, in lower-case letters and reference them to at least one Approved Item Name. Logistics Information Services does not index them directly to a Federal Item Identification Guide nor duplicate existing entries, such as AINs, a basic name or another colloquial.

Acceptable	**Nonacceptable**
baker's cap	CAP, FOOD HANDLER'S
See CAP, FOOD HANDLER'S	See FIIG A217A

(3) Reference a colloquial name that is applicable to more than one Approved Item Name to a basic name followed by the phrase "as modified" in parentheses, or to each of the Approved Item Names listed successively, separated by semi-colons.

(4) A colloquial name shall not reference its next higher assembly i.e., a part which references its end item.

Examples: indicator, polarity - See TEST SET SUBASSEMBLYS

(5) Do not reference a colloquial name to an unrelated item of supply.

Examples: circuit breaker - See CIRCUIT CARD ASSEMBLY

(6) A colloquial name shall not be too broad or too generalized so as to interpret it as applying to almost any AIN.

Examples: meter, modified - See WATTMETER.

3.2.5 Item Name Submittal

Submit all proposed additions, revision, and cancellations on the Names Transmittal Form DD Form 180, via Fascimile (FAX) through the Internet at www.dlis.dla.mil/forms/dd180.asp, or regular mail. (See appendix 3-2-A Forward to Logistics Information Services, ATTN: Logistics Information Services-KPN. Logistics Information Services will prepare a record to be kept for two years in accordance with the DLA Records Management Procedural Guide. All proposed name actions shall include a written justification/technical data which supports the request technically and procedurally.

a. Completion of the DD Form 180.

(1) DATE: Type in the current date.

(2) SUBMITTING ACTIVITY: Enter the two position Activity Code (See volume 10, Table 104)

(3) FIIG: Enter the Federal Item Identification Guide number applicable to the proposed name action. (e.g., A217A, A022B, or T093-A). List only one FIIG for each DD Form 180.

(4) NAME AND DELIMITATIONS: Enter the name(s), delimitations, colloquials, and any FIIG requirements incorporated in or affected by the proposal following the format outlined below. Include the name,

office symbol and telephone number of the submitter. Include the justification in this portion of the DD Form 180.

(a) List names in alphabetic sequence followed by any applicable colloquial names. (See 3.2.4.e)

(b) Align names two typed spaces from the left imprinted margin. Align delimitations in box form seven typed spaces from the left imprinted margin.

(c) Double line-spacing will separate all names. Use single line-spacing between a name and its delimitation and within the body of the delimitation.

(d) Capitalization shall follow procedures explained in section 3.2.4 above to distinguish between Basic Names, Approved Item Names, and Colloquial Names.

(e) Label individual name actions within each proposal "ADD;" "REVISE DEFINITION;" "CANCEL;" "REPLACED BY;" or other notation to identify the action. (See appendix 3-2-C through 3-2-I)

(f) Organize proposals that include both add and cancel actions so that all cancellations follow the additions.

(5) APPLICABILITY KEY: Enter the letter(s) indicating the FIIG Applicability Key on the same line as the name to which it applies. Utilize Applicability Key "A" for all name requests pertaining to FIIG A238. For new concept FIIGs enter N/A (not applicable).

(6) FSC NUMBER: Enter the four-digit Federal Supply Class on the same line as the name for which it is recommended. Beneath this number enter in parentheses the appropriate Condition Code. List specified FSCs for Condition Code 2 with an FSC Modifier (in lower case) on the same line. List all modifiers for Condition Code 2 FSCs regardless of action. List the FSCs in numeric order. (See appendix 3-4-A and 3-4-B)

(7) CHARACTERISTIC MASS CHANGE: The Characteristic Mass Change process updates the characteristic description of NSNs affected by submittal of proposals that cancel/replace or transfer Approved Item Names (AINs). Each proposal to cancel/replace or transfer a name must include a FIIG cross reference with the DD Form 180. The data required for FIIG cross references are FIIG, INC, MRCs, SAC/ISAC, Reply Codes, Reference Drawing Groups and style number.

(a) Tools for FIIG Characteristic Mass Change:

(1) MRC Summary: Listing of MRCs and Replies by AIN within NCB Codes 00 and 01. Use the MRC Summary to review and determine the characteristic changes for a FIIG or AIN. Order and review summary before submitting DD Form 180.

To order MRC Summary listing or electronic file:

Commander
Logistics Information Services

Logistics Information Services-
KPN
Hart-Dole-Inouye Federal
Center 74 Washington Avenue
N.Ste. 7 Battle Creek, MI
49037-3084 E-Mail address:
fiigs@dla.mil

(2) FIIG cross reference AIN or FIIG changes for Characteristic Mass Change Processing. Develop a FIIG cross reference list using the MRC Summary and the proposed FIIG changes. (See examples of DD Form 180s in appendix 3-2-E thru I).

(b) Characteristic Mass Change: Logistics Information Services process that performs NSN maintenance of AIN transfers or FIIG changes. An AIN must have 100 or more characteristically described NSNs for this purpose. For AIN with less than 100 NSNs, refer to Data Base Discipline.

(c) Data Base Discipline: Logistics Information Services process that identifies NSNs for file maintenance due to AIN transfers or FIIG changes. An AIN must have less than 100 characteristically described NSNs for this process. Logistics Information Services sends the NSN output listings or tapes to Item Managers (IMs) for correction, or the IMs can make arrangements with Logistics Information Services-KPN to update the NSNs.

(8) NSN List: An NSN List shall be submitted with new approved Item Names, if any existing NSNs require maintenance action to convert to the new name.

(9) TAILORED CHARACTERISTICS: The five DLA Centers participating in the Tailored Characteristics program, DCSC, DESC, DGSC, DISC, and DPSC (Medical), must include the MRCs, in desired output order, for inclusion into the Tailored Characteristics Table. When no output required, enter “No Tailored Data Required”.

(10) Page Notation. Use additional copies of the DD Form 180 as continuation forms when required to complete the listing of all name proposals applicable to a FIIG. Number all forms. (e.g., PAGE 1 OF 5 PAGES) at the bottom of the form.

3.2.6 Item Name Coordination

a. Submitting activities will coordinate new names with FSC Manager(s) and FIIG Initiator as identified within each FIIG prior to submittal to Logistics Information Services. Upon receipt of the new name proposal, Logistics Information Services will review the submittal for compliance with procedures, format, and possible duplication and assign the Item Name Code
(INC). When required, Logistics Information Services will coordinate the revised name proposal with those services, agencies, and users affected by the change(s) to solicit concurrence or nonconcurrences and comments.

(1) Normally a proposed action to a revised name having more than fifteen (15) users shall require a C/C Distribution letter to notify all activities participating in the Federal Catalog System. We require a response within a 30-day timeframe from the date of the letter. If a response is not received, no interest is assumed..

(2) Normally when fifteen (15) or fewer activities have an interest in a revised name proposal, Logistics Information Services will coordinate the action with only those activities. We require a response to a coordination letter, normally within 30 days from the date of the letter. If a response is not received, no interest is assumed.

(3) Logistics Information Services will coordinate proposals concerning drugs and medical items with at least the Defense Personnel Support Center (DPSC) and the Veterans Administration (VA) and coordinate proposals concerning subsistence items with at least the VA, DPSC and the United States Department of Agriculture (USDA).

(4) Logistics Information Services will coordinate name proposals with NATO and other countries when a restriction occurs. We require a response within a 30-day time frame (e.g., going from a Condition Code 2 to a Condition Code 1) from the date of the letter. If a response is not received, no interest is assumed.

b. Logistics Information Services processes Item Names within a 5-180 day time frame which may include collaboration/coordination reconciliation, edit update, system changes and publications.

3.2.7 Item Name Approval/Disapproval

The approval of a proposed name action depends upon acceptance by Logistics Information Services-KPN and the results of any coordination effort. Logistics Information Services-KPN views justifiable nonconcurrence on a proposal as a reason for disapproval.

a. Item Name Code (INC) Assignment.

(1) Upon approval, Logistics Information Services assigns Item Names a five-position numeric Item Name Code (INC).

(2) Logistics Information Services references these INCs by numeric code to the AIN, FIIG, and FSC(s) in the Numeric Index of

Item Names, Section B of the Federal Item Name Directory (Cataloging Handbook H6).

b. Notification of Approval/Disapproval. Logistics Information Services will forward approved proposals for the addition of a new item name to the submitter with the INC and its effective date and return disapproved proposals to the submitter with justification comments. If unable to resolve the nonconcurrence, Logistics Information Services forwards the complete package to HQ DLA for resolution.

c. Logistics Information Services designates names for use only by NATO/foreign countries as "All Except USA," enclosed within parentheses, as the first part of the name definition.

d. For U.S. Activities: Names that are no longer required for U.S. use may either contain a CANCEL/REPLACE action with the cancelled name becoming "All Except USA" (AEUSA) or just making the CANCELLED name AEUSA.

e. Publications. Logistics Information Services updates the FLIS files used to support publication of name related data as required to incorporate approved name actions. Documents affected by name changes include:

(1) Federal Item Name Directory (FIND) for Supply Cataloging, Handbook H6-A and H6-B.

(2) Federal Supply Classification, Handbook H2.

(3) H2/H6 Advance Notice (used to present cumulative changes to the above handbooks between issues).

(4) Federal Item Identification Guides.

APPENDIX 3-2-A
SAMPLE OF ITEM NAME SUBMITTAL FORM

PART "A"	ITEM COLLABORATION ACTION REQUEST		
DATE	REFERENCE	FIIG/IIG	
Item Names, Basic Names, Definitions, Index Entries and Justification	INC	Appl Key	NCS/FSC
Above proposed cataloging action will/will not require changes to existing item characteristic data of FIIGs as indicated.			
NATO Form AC/135 No. 28A	Page 1 of 1		

DD Form 180, May 85 (Computer Reproduced)

APPENDIX 3-2-B
SAMPLE OF COLLOQUIAL NAME

PART "A"	ITEM COLLABORATION ACTION REQUEST		
DATE 10 Feb 92	REFERENCE XX (Activity Code)	FIIG/IIG	
Item Names, Basic Names, Definitions, Index Entries and Justification	INC	Appl Key	NCS/FSC
ADD COLLOQUIAL NAMES: chain link fencing see FENCING, WIRE chain scale see SCALE, DRAFTING; SCALE, PLOTTING headless slotted set screws see SETSCREW jack bit grinder see GRINDING MACHINE, ROCK BIT **JUSTIFICATION:** Addition of the above colloquial names with cross-reference will assist FLIS users find the correct item names. P. O. C. **NAME OF SUBMITTER AND PHONE#** Above proposed cataloging action will/will not require changes to existing item characteristic data of FIIGs as indicated.			
NATO Form AC/135 No. 28A	Page 1 of 1		

DD Form 180, May 85 (Computer Reproduced)

PART "A"	ITEM COLLABORATION ACTION REQUEST	
DATE 10 Feb 92	REFERENCE XX (Activity Code)	FIIG/IIG

Item Names, Basic Names, Definitions, Index Entries and Justification	INC	Appl Key	NCS/FSC
REVISE COLLOQUIAL NAME: needle value see VALVE, GLOBE; VALVE ANGLE; STEM, NEEDLE VALVE **JUSTIFICATION:** To correct error in spelling of name and add Approved Item Name to colloquial. P. O. C. **NAME OF SUBMITTER AND PHONE#** Above proposed cataloging action will/will not require changes to existing item characteristic data of FIIGs as indicated. NATO Form AC/135 No. 28A	Page 1 of 1		

DD Form 180, May 85 (Computer Reproduced)

PART "A"		ITEM COLLABORATION ACTION REQUEST	
DATE 10 Feb 92	REFERENCE XX (Activity Code)	FIIG/IIG	
Item Names, Basic Names, Definitions, Index Entries and Justification	INC	Appl Key	NCS/FSC

DELETE COLLOQUIAL NAME: bands, copper see BAND SET, COPPER, DENTAL **JUSTIFICATION:** Approved Item Name BAND SET, COPPER, DENTAL is canceled and therefore no need for colloquial. P. O. C. **NAME OF SUBMITTER AND PHONE#** Above proposed cataloging action will/will not require changes to existing item characteristic data of FIIGs as indicated.			
NATO Form AC/135 No. 28A	Page 1 of 1		

DD Form 180, May 85 (Computer Reproduced)

APPENDIX 3-2-C
SAMPLE OF NEW ITEM NAME

PART "A"		ITEM COLLABORATION ACTION REQUEST	
DATE 10 Feb 92	REFERENCE XX (Activity Code)	FIIG/IIG A10400	
Item Names, Basic Names, Definitions, Index Entries and Justification	INC	Appl Key	NCS/FSC
ADD:			
SPARK PLUG An item containing two or more electrodes across which an electric spark is discharged to ignite a fuel and air mixture, primarily in internal combustion engines. Excludes GLOW PLUG; and ELECTRODE.		AB	
engine, aircraft			2925 (2)
engine, except aircraft			2920 (2)
JUSTIFICATION:			
At present, there is no equivalent item name available in the H-6.			
P. O. C. **NAME OF SUBMITTER AND PHONE#**			
Above proposed cataloging action will/will not require changes to existing item characteristic data of FIIGs as indicated.			
NATO Form AC/135 No. 28A	Page 1 of 1		

DD Form 180, May 85 (Computer Reproduced)

APPENDIX 3-2-D
SAMPLE OF REVISION OF DEFINITION

PART "A"		ITEM COLLABORATION ACTION REQUEST		
DATE 13 Feb 92	REFERENCE XX (Activity Code)		FIIG/IIG A104	
Item Names, Basic Names, Definitions, Index Entries and Justification		INC	Appl Key	NCS/FSC
REVISE DEFINITION:				
FLOAT, VALVE		06693	AN	4820 (1)
A floatation device used to actuate an inlet or outlet valve. It may be airtight and hollow, or of solid construction. Excludes floats designed for carburetors.				
JUSTIFICATION:				
Modern technology and research developments has resulted in new ways and products to define FLOAT VALVES. The proposed revised definition would allow cataloguing of new products under the present AIN. available in the H-6.				
P. O. C. **NAME OF SUBMITTER AND PHONE#**				
Above proposed cataloging action will/will not require changes to existing item characteristic data of FIIGs as indicated.				
NATO Form AC/135 No. 28A		Page 1 of 1		

DD Form 180, May 85 (Computer Reproduced)

APPENDIX 3-2-E
SAMPLE OF "All EXCEPT USA" DELETION

PART "A"		ITEM COLLABORATION ACTION REQUEST	
DATE 14 Feb 92	REFERENCE XX (Activity Code)	FIIG/IIG A241	
Item Names, Basic Names, Definitions, Index Entries and Justification	INC	Appl Key	NCS/FSC
REVISE (REMOVE "All Except USA"):			
BAND, SERVICE CAP:	32997	AT	8315 (1)
A ribbon, usally black in color, which may show inscriptions. It is primarily worn by the Navy, but may also be worn by other personnel. Excludes: BAND HELMET, CAMOUFLAGE.			
JUSTIFICATION:			
It has been found that a need now exists in this country to now use the above name. There is now aneed to stock list the above name, so please remove the AEUSA.			
P. O. C. **NAME OF SUBMITTER AND PHONE#**			
Above proposed cataloging action will/will not require changes to existing item characteristic data of FIIGs as indicated.			
NATO Form AC/135 No. 28A	Page 1 of 1		

DD Form 180, May 85 (Computer Reproduced)

APPENDIX 3-2-F
SAMPLE OF CANCELLATION WITHOUT REPLACEMENT

PART "A"	ITEM COLLABORATION ACTION REQUEST		
DATE 14 Feb 92	REFERENCE XX (Activity Code)	FIIG/IIG A104	
Item Names, Basic Names, Definitions, Index Entries and Justification	INC	Appl Key	NCS/FSC
CANCEL: DUMMY BATTERY ASSEMBLY An item designed to occupy the space of a BATTERY ASSEMBLY. It does not have electrical characteristics. (Cancelled Not Replaced) **JUSTIFICATION:** This item is no longer required. There is no pop count against this item and with no users there is no reason to keep this item in the system to overload the H6. P. O. C. **NAME OF SUBMITTER AND PHONE#** Above proposed cataloging action will/will not require changes to existing item characteristic data of FIIGs as indicated.	60426	BC	6135 (1)
NATO Form AC/135 No. 28A	Page 1 of 1		

DD Form 180, May 85 (Computer Reproduced)

APPENDIX 3-2-G
SAMPLE OF CANCEL/REPLACE

PART "A"	ITEM COLLABORATION ACTION REQUEST		
DATE 19 Feb 92	REFERENCE XX (Activity Code)	FIIG/IIG T324-H	
Item Names, Basic Names, Definitions, Index Entries and Justification	INC	Appl Key	NCS/FSC
CANCEL/REPLACE:			
TANK, LIQUID STORAGE, METAL	08627	HA	5430 (1)
(Repaced by TANK, LIQUID STORAGE INC-----)		HA	5430 (1)
REPLACED BY:			
TANK, LIQUID STORAGE A receptacle or structure of sturdy construction and of various shapes, the top of which may be open or closed, used for storage of bulk liquids such as gasoline, oil or water. The tank may be equipped with pipe fittings. Excludes tanks fabricated for use as an integral part of another system and trailer or truck mounted tanks designed for transporting liquids. See also, TANK, ASPHALT STORAGE and TANK, HOT WATER STORAGE. (Replaces TANK, LIQUID STORAGE, METAL)			
JUSTIFICATION:			
The name being canceled is too restrictive and both names are synonymous in construction and application, therefore; two item names are not required to identify one item of supply. P. O. C. **NAME OF SUBMITTER AND PHONE#**			
Above proposed cataloging action will/will not require changes to existing item characteristic data of FIIGs as indicated.			
NATO Form AC/135 No. 28A	Page 1 of 1		

DD Form 180, May 85 (Computer Reproduced)

APPENDIX 3-2-H
SAMPLE OF FIIG TRANSFER

PART "A"	ITEM COLLABORATION ACTION REQUEST		
DATE 21 Feb 92	REFERENCE XX (Activity Code)	FIIG/IIG A239	
Item Names, Basic Names, Definitions, Index Entries and Justification	INC	Appl Key	NCS/FSC
DELETE FROM FIIG A239:			
FREQUENCY REGULATOR SUBASSEMBLY	60509	C	6110 (1)
Two or more different types of items having a common mounting or mounted on each other which together form a portion of a REGULATOR, FREQUENCY, but which in itself is not a complete functioning item and cannot be assigned a more definite item name. (Transfer from FIIG A239 to FIIG T012)			
JUSTIFICATION:			
Recommend transferring approved item name listed above from FIIG A239 (Miscellaneous Items) to FIIG T012 (Subassemblies). This change will allow full item descriptions to be attained as only partial descriptions can be obtained with FIIG A239. P. O. C. **NAME OF SUBMITTER AND PHONE#**			
Above proposed cataloging action will/will not require changes to existing item characteristic data of FIIGs as indicated.			
NATO Form AC/135 No. 28A			
	Page 1 of 2		

DD Form 180, May 85 (Computer Reproduced)

PART "A"	ITEM COLLABORATION ACTION REQUEST		
DATE 21 Feb 92	REFERENCE XX (Activity Code)	FIIG/IIG T102-B	
Item Names, Basic Names, Definitions, Index Entries and Justification	INC	Appl Key	NCS/FSC

ADD: FREQUENCY REGULATOR SUBASSEMBLY Two or more different types of items having a common mounting or mounted on each other which together form a portion of a REGULATOR, FREQUENCY, but which in itself is not a complete functioning item and cannot be assigned a more definite item name. (Transfer from FIIG A239 to FIIG T012-B) **JUSTIFICATION:** Recommend transferring approved item name listed above from FIIG A239 (Miscellaneous Items) to FIIG T012-B (Subassemblies). This change will allow full item descriptions to be attained as only partial descriptions can be obtained with FIIG A239. P. O. C. **NAME OF SUBMITTER AND PHONE#** Above proposed cataloging action will/will not require changes to existing item characteristic data of FIIGs as indicated.	60509	B	6110 (1)
NATO Form AC/135 No. 28A	Page 2 of 2		

DD Form 180, May 85 (Computer Reproduced)

APPENDIX 3-2-I
SAMPLE OF "ALL Except USA" ADDITION

PART "A"		ITEM COLLABORATION ACTION REQUEST	
DATE 21 Feb 92	REFERENCE XX (Activity Code)	FIIG/IIG T327-A	
Item Names, Basic Names, Definitions, Index Entries and Justification	INC	Appl Key	NCS/FSC
REVISE: (to "ALL EXCEPT USA") PHOTOELECTRIC CELL (All except USA) For USA use INC 00101 Canceled Replaced by SEMICONDUCTOR DEVICE, PHOTO; INC 20587; FIIG A110A, App Key C. An item which when activated by light energy changes its electrical properties correspondingly in a way that can be used for generation of electrical signals.	00101		5980 (1)
JUSTIFICATION: Both AINs are synonymous in construction and application.			
P. O. C. **NAME OF SUBMITTER AND PHONE#** Above proposed cataloging action will/will not require changes to existing item characteristic data of FIIGs as indicated.			
NATO Form AC/135 No. 28A	Page 1 of 2		

DD Form 180, May 85 (Computer Reproduced)

PART "A"		ITEM COLLABORATION ACTION REQUEST
DATE 21 Feb 92	REFERENCE XX (Activity Code)	FIIG/IIG T327-A

Item Names, Basic Names, Definitions, Index Entries and Justification	INC	Appl Key	NCS/FSC
CANCEL:			
PHOTOELECTRIC CELL (Replaced by SEMICONDUCTOR DEVICE, PHOTO; INC 20587; FIIG A110A)	00101	AA	5980 (1)
JUSTIFICATION:			
A PHOTOELECTRIC CELL and a SEMICONDUCTOR DEVICE, PHOTO are synonymous in construction and application, therefore; two item names are not required to identify one item of supply.			
P. O. C. **NAME OF SUBMITTER AND PHONE#**			
Above proposed cataloging action will/will not require changes to existing item characteristic data of FIIGs as indicated.			
NATO Form AC/135 No. 28A	Page 2 of 2		

DD Form 180, May 85 (Computer Reproduced)

CHAPTER 3
FEDERAL ITEM IDENTIFICATION GUIDES

3.3.1 Federal Item Identification Guide (FIIG)

A FIIG provides standard requirements, formats, and guidance necessary to establish adequate characteristics and supply management data for items of supply. Logistics Information Services assigns FIIGs to different commodity areas and group similar items together to facilitate identification and management purposes. Use the Military Standard Item Characteristics Code Structure (MILSTICCS) in these guides to gather machine-oriented item logistics data. This chapter shall provide procedural guidance for the development, coordination, and maintenance of Federal Item Identification Guides. Format rules and the data collection concepts presented shall form the basis of a systematic, uniform program for item identification. See appendix 3-3-A for samples of FIIG information and to illustrate the format described below. FIIGs are available through the Internet at www.dlis.dla.mil/fiigdata/fiigs.asp.

3.3.2 Types of FIIGs

There are three types of FIIG documents.

a. Basic FIIG. A comprehensive document used to govern the collection of physical and performance characteristics (and characteristics data to support other logistics functions) for each descriptive item entered into the FLIS data base. It contains one or more Approved Item Name(s) (AINs) in one or more Applicability Key(s) (group of applicable requirements). Identify a basic FIIG by the prefix “A” or “T”.

b. Miscellaneous FIIG (FIIG A239). A general purpose document previously used for providing a means for describing items not contained in a specific basic FIIG because of a low population, new commodity areas, or not having an AIN.

c. New Concept FIIG. A basic FIIG that contains one or more AIN(s) but all requirements apply equally to each AIN (no Applicability Keys). These are identified by the prefix “A500...” and above.

3.3.3 FIIG Maintenance Requirements

There are two categories for the maintenance action for FIIGs as follows:

a. Administrative Maintenance.

(1) Discovery of typographical errors or omissions in the printed copy of a FIIG.

(2) Necessary expansion or reduction of reply code field in reply tables.

(3) Change of Master Requirement Code (MRC) for processing purposes and no changes to the technical content of the requirement.

(4) Clarification or addition of instructional notes to establish and/or protect the integrity of data input into the FLIS database where such actions do not affect the technical content of the data or the FIIG.

(5) Addition of mandatory all inclusive requirements (e.g., MRC ELRN).

b. Technical Maintenance. Technical revision to a FIIG follows these conditions:

(1) Inadequate logistics functions for the existing FIIG (e.g., addition of AND/OR coding).

(2) Deletion of item names.

(3) Addition of new AINs which fit an existing Applicability Key without change.

(4) Mass addition of requirements to a group of FIIGs.

(5) Add/delete MRCs. Give careful consideration to the impact of changes to the item name. Logistics Information Services will only accept changes to an existing Applicability Key(s) that goes from "as required" (ALL* or AB*) to "mandatory" (ALL or AB).

(6) Add reference drawings.

(7) Add an item name which fits the homogeneous grouping in the FIIG (e.g., New Concept FIIGs).

3.3.4 FIIG Maintenance Methods

FIIG maintenance actions follow these methods:

a. Logistics Information Services Distribution C/G letter: For maintenance actions of an operational immediate nature, incorporate these letters in Volume 3 , within one year after issuance and cancel the C/G letter.

b. FIIG Page Changes: Issue page changes to published FIIGs to formally incorporate changes into the FIIG. This may or may not affect the technical content of the FLIS database. The Page Change Number and the effective date will appear on each page; a Cover Sheet will list page numbers affected. U.S. activities will coordinate all proposals with FIIG Initiator who, in turn, will submit proposal to Logistics Information Services.

c. Reprint: Whenever a proposed page change affects 70 percent of the pages of a published FIIG or after 4 Page Changes, process the data as a Reprint rather than a FIIG Page Change. A reprinted FIIG will contain all outstanding page change data. Assign a new effective date and clearly mark the FIIG Cover with "REPRINT". Identification of page changes are on the cover.

d. FIIG Changes for NATO/Foreign countries. Forward all internationally collaborated changes to Logistics Information Services for coordination with U.S. activities. Enter the changes requested by NATO/Foreign countries, which are applicable to "ALL Except USA" into the FIIG and identify with a crosshatch (#). Add changes, which are applicable to U.S. items of supply, to the FIIG in accordance with paragraph 3.3.3.b . Logistics Information Services will review the proposals and comments from NATO/Foreign countries and forward them within 5 working days to the FIIG initiator.

e. Coordinated IIGs. FIIGs that contain both U.S. and NATO/Foreign country coordinated requirements are to be identified as “COORDINATED IIGS” on the cover of the FIIG.

f. New Concept FIIGs. (U.S. Activities)

(1) The Defense Logistics Agency (DLA) Centers will not add new AINs to FIIG A239. Other agencies and services should develop New Concept FIIGs (A500) whenever possible in lieu of FIIG A239 use.

(2) The DLA Defense Supply Centers (DSCs) will coordinate with technical and engineering functional areas and any others deemed essential prior to submittal to Logistics Information Services. The purpose of this coordination is to insure support to these areas. Give consideration to the identification of those requirements/ characteristics needed for the automated Procurement Item Description (PID), Procurement Description (PD), Acquisition Item Description (AID), etc. The automated PID is a function included in the enhancement to Cataloging Tools On Line (CTOL).

(3) Submit NATO proposals to Logistics Information Services will forward to appropriate Integrated Materiel Manager (IMM). NATO will also forward requests for AINs, which fit an existing Applicability Key in an existing FIIG, to Logistics Information Services.

(4) Forward other Services and Agencies (S/A's) proposals to Logistics Information Services for processing. Coordinate as determined appropriate by the S/A before submittal. If FSC managed by an other activity, submit them to the IMM responsible for the proposed FSC. Coordinate with the FSC Manager of FIIGs developed/proposed by other than the IMM for the FSC. Forward proper documentation reflecting this coordination to Logistics Information Services concurrent with the preparer's request for FIIG publication. For incorrect FSC management, the receiving IMM is responsible for forwarding to the appropriate IMM with notification to the originator. When an originator cannot determine the responsible IMM, send the proposal to Logistics Information Services-KPN so stating. Identify IMMs in appendix 3-3-D or volume 13, chapter 13.2 , appendix 13-2-A , Standard FSC Table.

(5) Forward requests for maintenance to FIIGS developed by a NATO country (other than the U.S.; identified on cover) to Logistics Information Services-KPN for collaboration with the FIIG initiating activity.

(6) Until implementation of a bulletin board to provide visibility of name development, the following will apply:

(a) Each developing activity will notify all other activities of their names scheduled for development of New Concept FIIGs.

(b) The list will include the name/definition, FSC, proposed date of development, and name/number of point of contact.

(c) Forward the list to the appropriate initiators found in appendix 3-3-D . All responses to the initiator will receive the same distribution.

(d) Logistics Information Services will advise NATO/Foreign countries.

(7) Naming Authority. The naming authority will remain at Logistics Information Services for control purposes. In those cases where conflicts arise concerning technical content, the initiating activity (IMM FSC Manager) having commodity expertise will be responsible for the technical content of the item name and/or definition. For unresolved conflicts between the DSC and S/As, refer the item name to Logistics Information Services for reconciliation.

(8) Transfer of Names. The IMM may decide which item names to transfer to the applicable New Concept FIIG. “All Except USA” and/or U.S. names may be transferred. The “All Except USA” item names will be identified with a crosshatch (#) in the Index of Approved Item Names. Once Logistics Information Services establishes a New Concept FIIG it is the IMM's responsibility to consider all future name transfer requests to or from the New Concept FIIG. Logistics Information Services will monitor these transfers to insure that sufficient justification warrants the action. Logistics Information Services will determine if it is necessary to coordinate with the user(s).

g. New Concept FIIGS. (NATO/foreign countries)

(1) Submit requests for a new INC and a New Concept FIIG to Logistics Information Services with all supporting technical documentation.

(2) Logistics Information Services will send the FIIG to the appropriate IMM for review. The IMM approves or disapproves the FIIG for U.S. use, annotates changes, and returns the FIIG to Logistics Information Services for processing. If disapproved, Logistics Information Services will return the FIIG to the appropriate NATO country with comments submitted from the IMM.

(3) Logistics Information Services will process FIIGs approved for U.S. use like all other FIIGs.

(4) Logistics Information Services will publish FIIGs not adopted for U.S. use but not include in the U.S. mechanized system.

MRCs assigned are visible in the MRD. Logistics Information Services will include the INC in the H2/H6 publications as “All Except USA” (AEUSA).

(5) The IMM determines characteristic requirements for the U.S. Logistics Information Services will continue to support NATO/Foreign country requirements. FIIG requirements developed by NATO/foreign countries become AEUSA if not adopted by the U.S. Logistics Information Services will resolve duplicate requirements and incorrect FIIGs.

(6) Logistics Information Services will process reports of FIIG deficiencies and requests for changes to New Concept FIIGs same as those for any other FIIGs. NATO/foreign countries will collaborate maintenance requests with all countries (per ACodP-P1) and send them to Logistics Information Services-KPN.

(7) The U.S. will not initiate a New Concept FIIG for AEUSA names. Logistics Information Services will publish country-requested FIIGs for AEUSA names when there is no U.S. interest. The U.S. mechanized system will not allow processing of items covered by the AEUSA name. If there is duplication or overlap of existing names, Logistics Information Services will return with recommendations. Resubmit with justification for reconsideration.

(8) There will be no conversion of New Concept FIIG numbers to INCs. The assigned numbers are permanent.

(9) Logistics Information Services will reject NATO/foreign country requests for assignment of AEUSA names to FIIG A239. Logistics Information Services may however, recommend another existing FIIG or the creation of a New Concept FIIG in lieu of FIIG A239, when appropriate.

(10) The responsible IMM will consider requested addition of AEUSA names to the New Concept FIIG when appropriate. (See 3.3.4.f(7))

h. Formatting

(1) General Format Instructions.

(a) Prepare data on 8 1/2x11 inch plain computer paper.

(b) Use plain typing in all FIIG preparation. Use bold and italic for new and revised information.

(c) A capitalized title (including FIIG number) will appear centered, at the top of each page of each section, appendix, and index of the FIIG.

(d) Number the FIIG pages sequentially. The General Information Section will start with Arabic numeral one, except for New Concept FIIGs which contain no General Information Section. In Appendix B, Logistics Information Services will assign reference drawing numbers which will appear on even numbered point pages (e.g., MRCs on page 108 and the drawings on pages 108.1, 108.2, and the like).

(e) Underline columnar titles.

(2) Cover Page. The FIIG cover will display the following information:

(a) An identifying FIIG number and publishing date shall appear in the upper-right corner.

(b) Logistics Information Services will assign only New Concept FIIGS which begin with A500.

(c) Title the document: “FEDERAL ITEM IDENTIFICATION GUIDE,” centered, beneath which will appear the title of the commodity area it represents. For New Concept FIIGs, the INC may also appear.

(d) Note the name and address of Logistics Information Services as the activity responsible for publication. The New Concept FIIGs will also contain the name, address, and telephone number of the IMM.

(3) General Information. This section of the FIIG introduces and describes the contents. For New Concept FIIGs, see appendix 3-3-B and 3-3-C . It also provides general and special instructions and technical changes as required. Logistics Information Services is responsible for developing the standard General Information section. The responsible activity may add pertinent information.

(a) Format Instructions:

(1.) Number paragraphs and separate by two line spaces.

(2.) Paragraph titles will be concise and underlined. Capitalize the first letter of each major word.

(3.) Indent subparagraphs and number or letter in accordance with general letter format.

(b) Structure. The Standard General Information section will describe the following topics in sequence:

Purpose and Scope
Contents (lists contents of FIIG)
Index of Approved Item Names (New Concept FIIGs do not contain this unless FIIG contains more than one Item Name.)
Applicability Key Index (New Concept FIIGs do not contain this)
Section I - Item Characteristics Data Requirements
Appendix A - Reply Tables (as applicable for New Concept FIIGs)
Appendix B - Reference Drawings (as applicable)
Appendix C - Technical Data Tables (as applicable)
Administrative Data - Provides instructions for input of Administrative MRC CLQL (see Appendix 3-3-C for New Concept FIIGs)
Special Instructions - Provides special instructions such as input for measurements (see Appendix 3-3-C for New Concept FIIGs)
Special Notes - Contains any special notes pertinent to FIIG
Maintenance - Identifies preparing activity and instructions for requesting changes (New Concept FIIGs do not contain this)

(4) Index of Data Requirements. The FIIG initiating activity prepares this index. Arrange in alphabetic sequence by MRC, cross referenced to the applicable data requirements code and page number. New Concept FIIGs do not contain this information.

(5) Index of Approved Item Names (AINs). This index provides the user with the item names, their definitions, INCs, and Applicability Keys covered by the FIIG. Do not reference any AIN to more than one FIIG. New Concept FIIGs may contain this index if more than one name applies.

(a) Content. The index will contain the AINs with definitions and INCs as they appear in the Federal Item Name Directory for Supply Cataloging, Cataloging Handbook H6, which is applicable to the FIIG. Each item name will have an Applicability Key recorded to indicate the applicability of each requirement to that item name. Assign same Applicability Key to AINs referencing the same requirements MRCs. New Concept FIIGs do not contain an Applicability Key.

(b) Format. Display information in a columnar fashion.

(1.) The first column, titled "Approved Item Name," will list the AINs with their definitions in alphabetic sequence.

(2.) The second column, titled “INC,” will list the five-position INC matched to each AIN entry.

(3.) The third column, titled “App Key,” will list the alphabetic Applicability Key for each AIN. New Concept FIIGs will not contain the App Key column.

(6) Applicability Key Index. This index provides the user with a reference table with MRC requirements for each Applicability Key. New Concept FIIGs do not contain this index.

(a) Content. The index will include all MRCs, the page numbers on which they appear, all Applicability Keys, and notations indicating “required” or “as required” conditions.

(b) Format. Arrange the index in columns.

(1.) The first column, titled "MRC" will list all MRCs in the same order as they appear in the FIIG.

(2.) The second column, titled “Page No” will identify the page on which each MRC appears.

(3.) The third column, titled “Applicability Key” will list every Applicability Key. These will list designators for each MRC.

(7) Section I - Item Characteristics Data Requirements. Section I is the main body of the FIIG. By answering requirements in this section, the user builds a formatted, machineable description for an item of supply. Use the required information accumulated in this description to differentiate items for NSN assignment for other logistic functions. The development of requirements shall conform to procedures given in the MILSTICCS Procedures Manual, DLAM 4140.6, Aug 1970.

(a) Content. Section I contains requirement statements and definitions with appropriate instructions and replies needed to properly identify items within the commodity area of the FIIG.

(1.) Requirements. Establish a requirement in such a manner that resulting replies will be brief, fully describe the physical and performance characteristics defined, and are not subject to arbitrary interpretation. It consists of a Master Requirement Code (MRC), a title, and a definition. Provide reply instructions to mandate the format for answers to the requirement. New Concept FIIGs must use only reply table MA01 for material MRCs and SF01 for surface treatment MRCs. Do not use MRCs in the MRD which have "/D/" recorded. The mechanized system does not allow these MRCs.

(2.) FIIG Requirements/Reply Structure Concept. Structure replies to requirements in either coded or clear text language or a combination of the two (as specified) in accordance with the principles of MILSTICCS.

P — pico — (e.g., picofarad)
U — micro — (e.g., microfarad)
L — milli — (e.g., millimeter, milligram)
C — centi — (e.g., centimeter, centiliter)
D — deci — (e.g., decigram)
Q — the unit — (e.g., meter, ohm, gram)
T — deca or deka — (e.g., decagram, decameter)

H — hecto — (e.g., hectometer, hectogram)
K — kilo — (e.g., kilometer, kilogram)
M — mega — (e.g., megohm, megahertz)
G — giga — (e.g., gigohm, gigahertz)

(4.) The FIIG reflects requirement applicability of all requirements to each AIN by the use or absence of an Applicability Key.

(b) Format. Organize Section I within a standard columnar format as explained below. Refer to the FIIG example provided in appendix 3-3-A . Refer to appendix 3-3-B for New Concept FIIG examples.

(1.) Head each page by four capitalized column titles separated from the text by a dividing line. New Concept FIIGs contain three capitalized column titles.

(2.) Title the first page of Section I "SECTION I, ITEM CHARACTERISTICS DATA REQUIREMENTS." Title New Concept FIIGs "SECTION I".

(3.) The first column, titled: "APPL KEY," will contain the Applicability Key indicator(s) for each requirement. New Concept FIIGs do not contain this column.

(4.) The second column titled "MRC" will list the four-position Master Requirement Code that corresponds to each requirement. This is the first column in New Concept FIIGs.

(5.) The third column titled "Mode Code" will identify the one-position, alphabetic Mode Code assigned to each MRC. This is the second column in New Concept FIIGs.

(6.) The fourth column titled "Requirements" will contain the requirement titles, definitions, reply instructions, reply tables, notes, and special instructions. The first MRC requirement in Section I is always the MRC NAME, ITEM NAME, followed in sequence (insofar as possible) by requirements common to all item names covered by the FIIG, requirements specific to particular item names, other requirements necessary for identification, the standard data requirements and, then, after MRC ELCD (Extra Long Characteristics Description), those requirements needed to support logistics functions other than NSN assignment. This is the third column in new concept FIIGs.

(8) Section II - Data Range Criteria. Section II will be deleted from all FIIGs. This will occur at reprint time of each individual FIIG.

(9) Do not include Section I (Supplementary Technical and Supply Management Data) in new FIIGs. Include all requirements needed to support logistics functions other than NSN Assignment in Section I of the FIIG following MRC ELCD. Logistics Information Services will identify these MRCs on Segment M output with the Roman numeral I. Fully coordinated (tan covered) and New Concept FIIGs do not contain Section I. Include these MRCs in Section I before MRC FEAT.

(10) Appendix A - Reply Tables.

(a) Content. This appendix consists of reply tables and tables of Identified Secondary Address Codes (ISACs) organized for reference by Section I requirements. Include tables based upon the following criteria:

(1.) Tables of ten or more replies or ISACs. Tables of 25 or more replies for New Concept FIIGs.

(2.) Tables of more than five replies or ISACs, when referenced by more than one requirement.

(b) Format.

(1.) Title the first page "INDEX TO APPENDIX A" and list all the tables in sequence. Number each table and label as Table 1 , Table 2 , etc. The first column of the index lists the table number, followed by a dash and the capitalized title. The second column titled "Page No" gives page numbers that apply to each table.

(2.) Arrange the body of Appendix A in table sequence, each identified by a capitalized title and a table number. Head ISAC tables with a list of all applicable MRCs. Reply tables shall note in parentheses, after the table number, the four-position code assigned to each reply table in the MRD. Tables generally consist of two columns:

(11) Appendix B - Reference Drawing Groups. This appendix displays drawings of item configurations with dimensional requirements necessary to describe basic item features.

(a) Content. Appendix B contains drawings, dimensional requirements, and instructions as required.

(1.) Drawings which appear in Appendix B will be isometric, if at all possible. This will be at the discretion of the initiating activity.

(2.) Logistics Information Services will accept sketches, drawings, illustrations, or photographs and prepare in final form.

(3.) Avoid use of legend letters on drawings. Use legend letters only in the reference drawings of those FIIGs where it is impossible or impractical to reflect the specific MRCs for the dimensional/physical characteristics requirements. Submit a full justification for their use. Logistics Information Services will attempt to change these at reprint time.

(4.) Locate reference drawings in Section I of the FIIG if they appear on four or less pages and are only referenced by one MRC. Related dimensional requirements will follow the drawings. However, if any one drawing group does not meet this criteria and has to appear in Appendix B, then locate all drawings for the FIIG in appendix B.

(5.) The FIIG initiator will assign a pseudo style number to new styles added to a FIIG. Pseudo numbers will begin with A and ascend alphabetically. They should be consistent with the character length of the rest of the assigned style numbers (e.g., Styles A, B, C or AA, AB, AC, etc.). Logistics Information Services will assign the authorized style number upon receipt of the drawing. Provide unique style titles for the new styles when assigned a Mode Code L. The style titles will not utilize the AIN or any portion thereof in their construction.

(b) Format.

(1.) Title the first page “INDEX TO APPENDIX B” and arranged in columns. The first column titled “Reference Drawing” lists the Reference Drawing Groups/Sections identified by letter designations and titles. The second column titled “Page No” lists page numbers that apply to each group.

(2.) Precede each Reference Drawing Group that includes MRCs by a page(s) titled “INDEX OF MASTER REQUIREMENT CODES” beneath which provide the group title (such as PERIPHERAL SHAPES). This index includes notes, reply instructions, reply tables and all the requirements applicable to that Reference Drawing Group. Organize the requirements in columns as follows:

(3.) Label pages of drawings with the applicable group/section designation and title and enclosed by a printed border margin. Give each drawing an identifying style number.

(12) Appendix C - Technical Data Tables.

(a) Content. Reserve this appendix for reference data, conversion charts and other useful information or table not expressed elsewhere in the FIIG.

(b) Format.

(1.) Title the first page “INDEX TO APPENDIX C”, and list all the tables in sequence. Number each table and labeled as: Table 1, Table 2, etc. The first column of the index lists the table number, followed by a dash and the capitalized title. The second column, titled “Page No.”, gives page numbers that apply to each table.

(2.) Arrange the data in columns, tables, or other suitable format that will be readily understandable to the user. Label each table with a title and table number.

(3.) See appendix 3-3-B for Appendix C standard tables. New Concept FIIGs may contain Appendix C.

3.3.5 FIIG Actions

The term “FIIG Action” includes both new FIIG development and changes to existing FIIGs. Logistics Information Services will review each FIIG action for impact to the technical content of the FLIS data base. Services/Agencies must submit a FIIG Cross Reference listing as part of the documentation for any FIIG change. See paragraph 3.2.5.a(7) - Tools for FIIG Characteristic Mass Change, appendix 3-2-E thru I for examples of DD Form 180s and appendix 3-3-E for example of FIIG Cross Reference.

a. Characteristic Mass Change will review each submitted FIIG Action and the accompanying FIIG Cross Reference list.

b. Criteria for Characteristic Mass Change are:

(1) Transfers of INCs from one FIIG to another FIIG. (e.g., INC 06657, FIIG - A003B0 transferred to A500D0.)

(2) Change INC(s):

(a) Canceled/Replaced INC(s): (e.g., TIRE, PNEUMATIC - 11002 canceled/replaced by TIRES, PNEUMATIC, AIRCRAFT - 51021 and TIRE, PNEUMATIC, VEHICULAR - 51020).

(b) All Except USA INC(s): (e.g., HORN, ELECTRICAL - 00139 (All Except USA) canceled/replaced by HORN, SIGNAL - 42662).

(c) Canceled INC(s) with no replacement are not Mass Change candidates, See Data Base Discipline, paragraph 3.3.5.c .

(3) Replace one MRC with another. (e.g., Replace MATL with MATT) (e.g., or Replace AAFU - Tire Size with CYFM - Tire Size and Designation.)

(4) Change/Add Secondary Address Coding.

(a) Secondary Address Coding (SAC) to AND/OR coding. (e.g., Replace - ADVN1AJAB0.135,ADVN1BJAC0.143) with - ADVNJAB0.135$$JAC0.143) (e.g., Replace - AASF1AJBSA35.0,AASF1BJCSA55.0 with - CQFMJSAB35.0$$JSAC55.0)

(b) Identified Secondary Address Coding (ISAC) (e.g., Replace - ANNQ Material and Location ANNQHST0000ABQ with - MATT Material and ISAC MATT2ABDSTA000.)

(5) Change Mode Code.

(a) “E” Mode Code - clear text. (e.g., Replace - MATTEBRASS, QQ-B-626, COMP 22, 1/2 HARD with MATTDCK0131 and MDCLJBAQQ-B-626, COMP 22, 1/2 HARD.)

(b) “K” Mode Code - delete all references. (e.g., ABHPKA or KN.) The “K” Mode Code is invalid for new FIIG development.

(6) Replace Reply Code. (e.g., Replace - CBLDAAA = Shaft with - CBBLDCVJ = Shaft.)

(7) Change Style Number to a Reply Code. (e.g., Replace - AGMD - Ref Dwg Grp E, Flange Style - E1 with - AWLS - Connection Type - AAR or AAS.)

(8) Nontransferable Characteristic Data. Logistics Information Services uses MRC, HYST (internal Logistics Information Services use only) to capture nontransferable characteristic data for NSN research. This MRC also allows Defense Reutilization and Marketing Service (DRMS) to use item descriptions for sales catalogs. The Characteristic Mass Change application has exclusive use of this MRC. It will not appear in any FIIG. This MRC will appear in the NSN descriptions in LOLA or FEDLOG. (e.g., Replace - ADAVJAA0.219 with - HYSTOVERALL DIAMETER:0.219 INCHES NOMINAL.)

c. Data Base Discipline. Items that require manual correction will be identified and mailed to the Services/Agencies.

APPENDIX 3-3-A
SAMPLE OF FIIG INFORMATION

FIIG A499

Reprint Date: 22 Jan 99

FEDERAL ITEM IDENTIFICATION GUIDE

GIZMOS AND WIDGETS

This Reprint replaces, FIIG A499, dated 12 Dec 97, and incorporates all Changes, Errata, and Notices.

The provisions of this Reprint are effective 22 Jan 99.

DEFENSE LOGISTICS AGENCY
DEFENSE LOGISTICS INFORMATION SERVICE
BATTLE CREEK, MICHIGAN 49017-3084

PUBLISHED BY DEFENSE LOGISTICS INFORMATION SERVICE, BATTLE CREEK, MI

This Federal Item Identification Guide for Supply Cataloging is issued under the authority of Department of Defense Instruction 5025.7.

The use of this publication is mandatory for U.S.Federal Activities participating in Federal Catalog System Operations.

BY ORDER OF THE DIRECTOR

ROBERT L. SONGER
Colonel, USMC
Commander
Defense Logistics Information Service

GENERAL INFORMATION

1. Purpose and Scope

This Federal Item Identification Guide (FIIG) is a self-contained document for the collection, coding, transmittal, and retrieval of item characteristics and related supply management data for an item of supply for logistical use. This FIIG is to be used to describe items of supply identified by the Approved Item Names appearing in this section.

2. Contents

This FIIG is comprised of the following:

Index of Approved Item Names Covered by this FIIG
Applicability Key Index
Section I - Item Characteristics Data Requirements
Section III - Supplementary Technical and Supply Management Data (as applicable)
Appendix A - Reply Tables
Appendix B - Reference Drawing Groups (as applicable)
Appendix C - Technical Data Tables (as applicable)

a. Index of Approved Item Names Covered by this FIIG:

The index lists the Approved Item Names with definitions and Item Name Codes as they appear in Cataloging Handbook H6, applicable to this FIIG. In addition, each name entry is assigned an Applicability Key for use in relating the characteristics requirements in Section I to the specific item name.

b. Applicability Key Index:

The purpose of this index is to provide the user with a ready reference for determining the specific requirements which are applicable to a given Approved Item Name. This index lists all requirements in sequence as they appear in this FIIG. The applicability of a Master Requirement Coded requirement is indicated by the column headed by the specific item name Applicability Key as follows:

(1) The letter "X" indicates the requirement must be answered for a full descriptive item.

(2) The letters "AR" indicate the requirement is to be answered as required by (1) instructional notes within the FIIG; (2) when the reply is predicated on replies to a related main requirement; or (3) when an asterisk (*) is used in conjunction with the Applicability Key column in Section I.

(3) A blank in the column indicates the requirement is not applicable to the specific item name.

c. Section I - Item Characteristics Data Requirements:

This section contains the physical and performance characteristics requirements needed to describe and identify an item of supply. These characteristics differentiate one item from all other items of supply and are to be used to meet the needs of all supported functions. This section is arranged in columns. Identification of each column and instructions pertinent thereto are as follows:

(1) Applicability Key:

The first column shows the Applicability Key(s) for each requirement. It indicates whether the requirement need be satisfied for the item being identified. "ALL" indicates that the requirement must be answered for all items covered by the FIIG. One or more alphabetic character(s) or group of one or more alphabetic characters indicates a response is required when describing items with an Approved Item Name(s) represented by the key(s). An asterisk (*) used in conjunction with any Applicability Key indicates that the characteristic stated in the requirement may not be applicable to all items covered by the FIIG and replies to the requirements will be governed as follows:

(a) If the requirement calls for a characteristic that is not an inherent characteristic of the item being described, a reply will not be given for the requirement.

(b) If the requirement calls for a rating that is not an inherent characteristic of the item being described, a reply will not be given for the requirement.

(c) If the only appropriate reply to a requirement is NONE, a reply will not be given for the requirement.

(2) Master Requirement Code (MRC):

A four-position code which is assigned to a FIIG requirement for identification of the requirement, cross-referencing requirements in the various sections and appendices of the FIIG, and for mechanized processing and retrieval of FIIG generated data. Absence of an MRC for a requirement indicates a lead-in to requirements with individual MRCs in Appendix B.

(a) The coding technique for providing MULTIPLE/OPTIONAL responses will not be used for a Section I requirement assigned Mode Code A or L that leads to Appendix B sketches with dimensional requirements.

(b) Identified Secondary Address Coding:

This technique is for extending the Master Requirement Code so that a unique address is provided for each application of the requirement in relation to the item and is authorized only as instructed within the requirement. Responses coded through this technique will always consist of the following (1) Master Requirement Code, (2) indicator code (a single numeric character determined by the number of positions contained), (3) Identified Secondary Address Code (1 to 9-digit alphabetic codes determined by the number of predicted replies), (4) the Mode Code, (5) the Reply Code and/or clear text response, and (6) end with a record separator (*). Steps (1) through (6) are repeated for each application of the requirement.

(c) AND/OR coding:

A technique for extending the Master Requirement Code to provide a distinctive address for multiple responses to the same requirement. Responses coded through this technique will always consist of (1) Master Requirement Code, (2) Mode Code, (3) the response or Reply Code (as instructed by the requirement), (4) a single dollar sign ($) for an OR condition, or a double dollar sign ($$) for an AND condition, (5) the Mode Code, (6) the response or Reply Code (followed by conditions (4) through (6) for each of the multiple responses) and (7) end with a record separator (*). NOTE: Apply this technique only when instructed by the requirement sample reply (e.g.).

(3) Mode Code:

A one-position alphabetic code that specifies the manner in which a response will be prepared. Each requirement assigned an MRC is also assigned a Mode Code. Sample replies follow each FIIG requirement displaying the proper construction of a response for the assigned Mode Code. The response to a requirement will always be prepared in accordance with the assigned Mode Code and sample reply except in the following instances:

(a) Mode Code E may be used with any requirement, except requirement NAME or a requirement with Mode Code A, G, or L where the replies (or portion thereof in the case of chained requirements) applicable to the requirement are restricted by an authorized table of replies or other restrictions, and an appropriate reply has not been provided. E Mode Code replies are governed by the following:

-1- The E Mode Code reply must be in context with the requirement statement.

-2- The E Mode Code reply must be given totally in clear text.

-3- The E Mode Code reply must be structured in the same manner as the replies authorized for use with the requirement.

-4- The E Mode Code reply is not valid for any requirement wherein an Appendix B style number is the appropriate reply.

-5- The E Mode Code reply must be entered last when used in conjunction with AND/OR coding.

(b) Mode Code K may be substituted for any Mode Code, except Mode Codes D, G, or L. Reply Code A may be used with Mode Code K for any requirement when the appropriate reply is "Any Acceptable", unless otherwise instructed within the requirement. Reply Code N may be used with Mode Code K only when authorized by the requirement instructions. When Mode Code K is used in lieu of the assigned Mode Code, the MRC, Mode Code K and the appropriate standard Reply Code authorized for use with this Mode Code will be given. The following standard replies and codes are authorized for use with Mode Code K:

REPLY CODE	REPLY
A	ANY ACCEPTABLE
N	NOT RATED

(4) Requirement:

This portion includes the characteristics data elements and data use identifiers required to identify and differentiate one item of supply from another, narrative definitions, and explanations as to use and method of expression. Instructions for coding and preparing replies are also provided.

(5) Reply Code:

A code that represents an established authorized reply to a requirement.

d. Section III - Supplementary Technical and Supply Management Data:

This section includes those characteristics requirements necessary to support specific logistics functions other than National Stock Number assignment.

e. Appendix A - Reply Tables:

Tables of authorized replies to requirements and Reply Codes when the tables are too lengthy for inclusion in Section I/III, when applicable.

f. Appendix B - Reference Drawings:

This appendix contains representative illustrations which portray specific variations of one or more generic characteristics. If reference drawings contain requirement pages to be used in conjunction with illustrations for dimensioning purposes, the requirement pages will contain Master Requirement Codes, Mode Codes, and a statement of the requirement. A response to requirements on a requirement page is necessary only for those Master Requirement Codes applicable to the illustration selected.

g. Appendix C - Technical Data Tables:

This appendix contains conversion charts and similar data pertinent to the requirements in Section I/III, when applicable.

3. Enter administrative MRC CLQL immediately following the last FIIG requirement reply, as instructed below:

MRC	Mode Code	Requirement	Example
CLQL	G	COLLOQUIAL NAME (common usage name by which an item is known)	CLQLGWOVEN WIRE CLOTH*

4. Special Instructions and Indicator Definitions

a. Measurements:

Unless otherwise indicated within a requirement example, enter all measurements in decimal form, carried to the nearest three decimal places, with a minimum of one digit preceding the decimal. For SI (metric), enter all measurements with a minimum of one digit before and after the decimal. For fraction to decimal conversion table, see Appendix C.

Recording instructions for requirements using nominal or minimum and maximum:

If a nominal value is given, minimum and maximum values cannot be utilized within the same requirement reply.

If a value is given for minimum, a reply for maximum is mandatory unless otherwise specified in the source data. Likewise, if a value is given for maximum, a reply for minimum is mandatory unless otherwise specified in the source data. Enter the minimum value first followed by the maximum value, if applicable.

b. Indicators:

A cross hatch (#) following an AIN, MRC, Reply Code or Drawing Number indicates for "ALL EXCEPT USA" use only.

5. Indexes

a. Index of Data Requirements

This index is arranged in alphabetic sequence by Master Requirement Code, cross-referenced to the applicable data requirement and page number(s).

b. Index of Approved Item Names

This index is arranged in alphabetic sequence referenced to Applicability Key.

c. Applicability Key Index

This index is arranged in Applicability Key Sequence.

6. Maintenance

Requests for revisions and other changes will be directed to:

Commander
Defense Supply Center Columbus
ATTN: DSCC-VLF
Columbus, OH 43216-5000
(COMM) (614) 692-2911
(DSN) 850-2911

(BLANK PAGE)

FIIG A499
GENERAL INFORMATION
SECTION I/III REQUIREMENTS INDEX

MRC	Section I/III Requirements	Page No.
AATK	EYE INSIDE DIAMETER	31
AATP	SHOULDER THICKNESS	31
AATR	SHANK LENGTH	31
AATZ	EYE STOCK DIAMETER	31
AAUA	EYE STOCK THICKNESS	31
AAUD	HOOK INSIDE WIDTH	31
AAUE	DISTANCE FROM INSIDE CENTER OF BEND TO HOOK END	31
AAUF	HOOK OPENING WIDTH	31
AAVH	SHOULDER DIAMETER	31
AAWV	DISTANCE FROM INSIDE CENTER OF BEND TO BOLT END	31
AAWW	INSIDE DISTANCE BETWEEN SHANKS	31
AAZE	SHANK DIAMETER	31
ABHP	OVERALL LENGTH	31
AGAV	END ITEM IDENTIFICATION	16
CBBL	FEATURES PROVIDED	14
CQZR	DISTANCE FROM INSIDE OF BEND TO SHANK END	31
CRHT	DISTANCE FROM CENTER OF EYE TO SHANK END	31
CWXM	EYE OUTSIDE WIDTH	31
CXCY	PART NAME ASSIGNED BY CONTROLLING AGENCY	17
FEAT	SPECIAL FEATURES	15
HUES	COLOR	14
MATT	MATERIAL	13
MDCL	MATERIAL DOCUMENT AND CLASSIFICATION	13
NAME	ITEM NAME	13
PRMT	PRECIOUS MATERIAL	15
STYL	STYLE DESIGNATOR	14
SUPP	SUPPLEMENTARY FEATURES	16
THSD	THREAD SERIES DESIGNATOR	13
ZZZP	PURCHASE DESCRIPTION IDENTIFICATION	16
ZZZT	NONDEFINITIVE SPEC/STD DATA	15
ZZZV	FSC APPLICATION DATA	16

MRC	Section I/III Requirements	Page No.

(BLANK PAGE)

FIIG A499
GENERAL INFORMATION
INDEX OF APPROVED ITEM NAMES COVERED BY THIS FIIG

Approved Item Name	INC	App Key
GIZMO	01234	A

A hook-shaped item designed to hang or hold another item. It is threaded on one end.

WIDGET, ANGLE	54321	B

A hook-shaped item designed to hang or hold another item. It is not threaded on either end. For items threaded on one end, see GIZMO.

WIDGET, CLOSED	43210	B

An item designed to hang or hold another item. It has a closed loop on one end and is not threaded on the other end. For items with an open end, see WIDGET, ANGLE. For items threaded on one end, see GIZMO.

FIIG A499
GENERAL INFORMATION
INDEX OF APPROVED ITEM NAMES COVERED BY THIS FIIG

Approved Item Name	INC	App Key

(BLANK PAGE)

FIIG A499
GENERAL INFORMATION
APPLICABILITY KEY INDEX

MRC	Page No.	Applicability Key A	B
NAME	13	X	X
THSD	13	X	
MATT	13	X	X
MDCL	13	AR	AR
HUES	14	AR	AR
STYL	14	X	X
AATK	31	AR	AR
AATP	31	AR	AR
AATR	31	AR	AR
AATZ	31	AR	AR
AAUA	31	AR	AR
AAUD	31	AR	AR
AAUE	31	AR	AR
AAUF	31	AR	AR
AAVH	31	AR	AR
AAWV	31	AR	AR
AAWW	31	AR	AR
AAZE	31	AR	AR
ABHP	31	AR	AR
CQZR	31	AR	AR
CRHT	31	AR	AR
CWXM	31	AR	AR
CBBL	14	AR	AR
FEAT	15	AR	AR
ZZZT	15	AR	AR
PRMT	15	AR	AR
SUPP	16	AR	AR
ZZZP	16	AR	AR
AGAV	16	AR	AR
ZZZV	16	AR	AR
CXCY	17	AR	AR

MRC	Page No.	Applicability Key

(BLANK PAGE)

FIIG A499
SECTION I
ITEM CHARACTERISTICS DATA REQUIREMENTS

App Key	MRC	Mode Code	Requirements
ALL			
	NAME	D	ITEM NAME
			Definition: A NOUN, WITH OR WITHOUT MODIFIERS, BY WHICH AN ITEM OF SUPPLY IS KNOWN.
			Reply Instructions: Enter the applicable Item Name Code from the index appearing in the General Information Section. (e.g., NAMED01234*)
A			
	THSD	D	THREAD SERIES DESIGNATOR
			Definition: A DESIGNATION DISTINGUISHING ONE GROUP OF THREAD DIAMETER-PITCH COMBINATIONS FROM ANOTHER BY THE NUMBER OF THREADS PER MEASUREMENT SCALE FOR A SPECIFIC DIAMETER.
			Reply Instructions: Enter the applicable Reply Code from Appendix A, Table 1. (e.g., THSDDNC*)
ALL			
	MATT	D	MATERIAL
			Definition: THE CHEMICAL COMPOUND OR MECHANICAL MIXTURE PROPERTIES OF WHICH THE ITEM IS FABRICATED.
			Reply Instructions: Enter the applicable I/SAC from Appendix A, Table 2, followed by the Mode Code and applicable Reply Code from Appendix A, Table 6. (e.g., MATT2AADALB000*; MATT2AADGSB000$$DPCAM00*; MATT2AADALB000$DSTA000*)
ALL*			
	MDCL	J	MATERIAL DOCUMENT AND CLASSIFICATION
			Definition: THE SPECIFICATION, STANDARD, OR MANUFACTURES REFERENCE, AND THE CLASSIFICATION DESIGNATION, SUCH AS CLASS, CONDITION, TEMPER, AND THE LIKE, THAT IDENTIFIES THE MATERIAL.
			Reply Instructions: Enter the applicable I/SAC from Appendix A, Table 2, followed by the Mode Code and the applicable Reply Code from Appendix A, Table 3 and Appendix A, Table 4, and the document designation and classification. (e.g., MDCL2AAJBAQQ-A-250/5,T4*; MDCL2AAJFBGL2345, CAGE94117$$JBCL-P-410*; MDCL2AAJGBAMS4022$JDCMIL-S-11415*)

FIIG A499
SECTION I
ITEM CHARACTERISTICS DATA REQUIREMENTS

App Key	MRC	Mode Code	Requirements
ALL*			
	HUES	D	COLOR
			Definition: A CHARACTERISTIC OF LIGHT THAT CAN BE SPECIFIED IN TERMS OF LUMINANCE, DOMINANT WAVELENGTH, AND PURITY.
			Reply Instructions: Enter the applicable I/SAC from Appendix A, Table 2, followed by the Mode Code and the applicable Reply Code from Appendix A, Table 6. (e.g., HUES2BFDBL0000*; HUES2XADGR0000$$DRE0000*; HUES2XADBL0000$DBU0000*)
ALL			
	STYL	L	STYLE DESIGNATOR
			Definition: THE STYLE DESIGNATION INDICATING THE CONFIGURATION THAT MOST NEARLY CORRESPONDS TO THE APPEARANCE OF THE ITEM.
			Reply Instructions: Enter the group designator and the applicable style number from Appendix B, Reference Drawing Group A. (e.g., STYLLA20*)
--			
	----	-	STYLE DIMENSIONS
			The numeric values which establish the physical limits or boundaries of the item.
			See Appendix B, Reference Drawing Group A, Index of Master Requirement Codes.

NOTE FOR MRCS CBBL AND FEAT: E MODE REPLIES WILL NOT BE ACCEPTED IN REPLY TO MRC CBBL. IF A REPLY IS NOT INCLUDED ON THE TABLE FOR MRC CBBL, ENTER THE FEATURE IN REPLY TO MRC FEAT.

ALL* (See Note Above)			
	CBBL	D	FEATURES PROVIDED
			Definition: THOSE FEATURES, NOT OTHERWISE SPECIFIED, WHICH MAY BE REQUIRED FOR PROPER FUNCTIONING OF THE ITEM.
			Reply Instructions: Enter the applicable Reply Code from Appendix A, Table 7. (e.g., CBBLDAEQ*; CBBLDAEQ$$DBBW*)

FIIG A499
SECTION I
ITEM CHARACTERISTICS DATA REQUIREMENTS

App Key	MRC	Mode Code	Requirements

ALL* (See Note Preceding MRC CBBL)

FEAT G SPECIAL FEATURES

Definition: THOSE UNUSUAL OR UNIQUE CHARACTERISTICS OR QUALITIES OF AN ITEM NOT COVERED IN THE OTHER REQUIREMENTS AND WHICH ARE DETERMINED TO BE ESSENTIAL FOR IDENTIFICATION.

Reply Instructions: Enter the reply in clear text. Separate multiple replies with a semicolon. (e.g., FEATGADJUSTABLE NOSE CLIP*; FEATGADJUSTABLE NOSE PIECE; DISPOSABLE*)

NOTE FOR MRC ZZZT: IF THE SPECIFICIATION/STANDARD CITED IN REPLY TO MRC ZZZK IS NONDEFINITIVE, REPLY TO MRC ZZZT. THIS REPLY IS THE DATA WHICH IS NOT RECORDED IN SEGMENT C.

ALL* (See Note Above)

ZZZT J NONDEFINITIVE SPEC/STD DATA

Definition: THE NUMBER, LETTER, OR SYMBOL THAT INDICATES THE TYPE, STYLE, GRADE, CLASS, AND THE LIKE, OF AN ITEM IN A NONIDENTIFYING SPECIFICATION OR STANDARD.

Reply Instructions: Enter the applicable Reply Code from Appendix A, followed by the appropriate number, letter, or symbol. (e.g., ZZZTJTY1*; ZZZTJTY1$$JSTA*; ZZZTJTY1$JSTA*)

ALL*

PRMT D PRECIOUS MATERIAL

Definition: IDENTIFICATION OF THE PRECIOUS MATERIAL CONTAINED IN THE ITEM.

Reply Instructions: Enter the applicable Reply Code from Appendix A, Table 9. (e.g., PRMTDAUA000*; PRMTDAUA000$$DAGA000*; PRMTDAGA000$DAUA000*)

FIIG A499
SECTION I
ITEM CHARACTERISTICS DATA REQUIREMENTS

App Key	MRC	Mode Code	Requirements
ALL*			
	SUPP	G	SUPPLEMENTARY FEATURES
			Definition: CHARACTERISTICS OR QUALITIES OF AN ITEM, NOT COVERED IN ANY OTHER REQUIREMENT, WHICH ARE CONSIDERED ESSENTIAL INFORMATION FOR ONE OR MORE FUNCTIONS EXCLUDING NSN ASSIGNMENT.
			Reply Instructions: Enter the reply in clear text. (e.g., SUPPGMAY INCL HOLE IN UPPER SUPPORT FOR MTG DURING SHIPMENT*)
ALL*			
	ZZZP	J	PURCHASE DESCRIPTION IDENTIFICATION
			Definition: THE CONTROLLING ACTIVITY AND IDENTIFICATION OF A DOCUMENT USED IN LIEU OF A SPECIFICATION IN THE PROCUREMENT OF AN ITEM OF SUPPLY.
			Reply Instructions: Enter the 5-position Commercial and Government Entity (CAGE) Code, followed by a dash and the identifying number of the document. (e.g.,ZZZPJ81A37-30624A*)
ALL*			
	AGAV	G	END ITEM IDENTIFICATION
			Definition: THE NATIONAL STOCK NUMBER OR THE IDENTIFICATION INFORMATION OF THE END EQUIPMENT FOR WHICH THE ITEM IS A PART.
			Reply Instructions: Enter the reply in clear text. (e.g., AGAVG3930-00-000-0000*; AGAVGFORKLIFT TRUCK, SMITH CORPORATION, MODEL 12, TYPE A*)
ALL*			
	ZZZV	G	FSC APPLICATION DATA
			Definition: THE JUSTIFICATION FOR THE ASSIGNMENT OF A FEDERAL SUPPLY CLASS (FSC) TO AN ITEM BASED ON THE CLASSIFICATION OF THE NEXT HIGHER CLASSIFIABLE ASSEMBLY.
			Reply Instructions: Enter the name of the next higher classifiable assembly in clear text. (e.g., ZZZVGFUEL SYSTEM, GASOLINE ENGINE, NONAIRCRAFT*)

FIIG A499
SECTION I
ITEM CHARACTERISTICS DATA REQUIREMENTS

App Key	MRC	Mode Code	Requirements
ALL *			
	CXCY	G	PART NAME ASSIGNED BY CONTROLLING AGENCY

Definition: THE NAME ASSIGNED TO THE ITEM BY THE GOVERNMENT AGENCY OR COMMERCIAL ORGANIZATION CONTROLLING THE DESIGN OF THE ITEM.

Reply Instructions: Enter the reply in clear text. (e.g., CXCYGLINE PROCESSOR CONTROL BOARD*)

FIIG A499
SECTION I
ITEM CHARACTERISTICS DATA REQUIREMENTS

App Key	MRC	Mode Code	Requirements

(BLANK PAGE)

INDEX TO APPENDIX A

	Page No.
Table 1 - THREAD SERIES DESIGNATORS	21
Table 2 - LOCATION IDENTIFIED SECONDARY ADDRESS CODING	21 and 22
Table 3 - DOCUMENTING AUTHORITY	22
Table 4 - MATERIAL SEQUENCE RESPONSES	22 and 23
Table 5 - MATERIALS	23
Table 6 - COLORS	24
Table 7 - FEATURES PROVIDED	24
Table 8 - NONDEFINITIVE SPEC/STD DATA	25 and 26
Table 9 - PRECIOUS MATERIAL	27

(BLANK PAGE)

Table 1

THREAD SERIES DESIGNATORS

THIS TABLE IS FOR MRC THSD.

REPLY CODE	REPLY (AH06)
AM	ACME
BA	BA
BF #	BSF
PL #	BSP.PL
BW #	BSW
TT	BUTTRESS
DD	DARDALET
SM	ISO M
SS	ISO S
LH	LOWENHERZ
EM	M (METRIC SERIES)
MJ	MJ (METRIC SERIES)
NP	NPT
SJ	SI
SK	SI-M
SQ	SQUARE
UN	UN
NC	UNC
NE	UNEF
NF	UNF
NJ	UNJ
JC	UNJC
JE	UNJEF
JF	UNJF
JS	UNJS
NM	UNM
RC	UNRC
RF	UNRF
RT	UNRS
NS	UNS
WW	WHITWORTH

Table 2

LOCATION IDENTIFIED SECONDARY ADDRESS CODING

THIS TABLE IS FOR MRCS MATT, MDCL, AND HUES.

REPLY CODE	REPLY
2AA	OVERALL
2AX	BEARING SURFACE OF HEAD
2XA	FASTENER
2AZ	GRIP (shank or unthreaded portion)
2AH	HEAD (overall)

REPLY CODE	REPLY
2AL	LOCKING FEATURE
2AS	POINT (tip)
2AP	RING
2AY	SIDES OF HEAD
2BC	SPRING
2BD	STAND-OFF (bushing, ferrule, sleeve, receptacle, housing, spacer, retainer)
2BF	THREADS
2BB	TOP OF HEAD
2BG	CONCENTRIC HOLE
2BH	COUNTERBORE
2XB	ALL SHOULDERS (use when all shoulders are the same)
2AB	FIRST SHOULDER (includes single shouldered items)
2BA	SECOND SHOULDER
2AT	PRIMARY WASHER (closest to head)
2AR	SECONDARY WASHER
2YA	ALL HOLES (use when all holes are the same)
2AE	FIRST HOLE (includes item with one hole)
2AF	SECOND HOLE

Table 3

DOCUMENTING AUTHORITY

THIS TABLE IS FOR MRC MDCL.

REPLY CODE	REPLY (AP33)
G	ASSN STD
B	FED SPEC
C	FED STD
N	INTERNATIONAL STD/SPEC
D	MIL SPEC
E	MIL STD
F	MFR REF
H	NATIONAL SPEC

Table 4

MATERIAL SEQUENCE RESPONSES

THIS TABLE IS FOR MRC MDCL.

REPLY CODE	REPLY (AP18)
G	ALL MATERIAL RESPONSES (Use only when all material is controlled by the same document and classifications are identical)
A	SINGLE MATERIAL RESPONSE
B	1ST MATERIAL RESPONSE
C	2ND MATERIAL RESPONSE
D	3RD MATERIAL RESPONSE

Table 5

MATERIALS

THIS TABLE IS FOR MRC MATT.

REPLY CODE	REPLY (MA01)
ALA000	ALUMINUM
ALB000	ALUMINUM ALLOY
AL2017	ALUMINUM ALLOY 2017
AL0181 #	ALUMINUM ALLOY 2017 A
	Aluminum Alloy 355 (use Reply Code AL0045)
AL6062	ALUMINUM ALLOY 6062
AL0194 #	ALUMINUM ALLOY A-G4
CTB000	COBALT ALLOY
CT0022	COBALT ALLOY MP-159
CT0001	COBALT COMP L-605
CUA000	COPPER
CUB000	COPPER ALLOY
CU0063	COPPER ALLOY 110
	Copper Alloy CA110 (use Reply Code CU0063)
CU1156	COPPER ALLOY UNS C79200
MGA000	MAGNESIUM
MGB000	MAGNESIUM ALLOY
MG0013	MAGNESIUM ALLOY AZ10A
PCA000	PLASTIC
PCB000	PLASTIC ACETAL
PCD000	PLASTIC ACRYLIC
PCN000	PLASTIC PHENOLIC
PCP000	PLASTIC POLYAMIDE
RCA000	RUBBER NATURAL
RCB000	RUBBER SYNTHETIC
STA000	STEEL
ST1005	STEEL COMP 1005
ST1146	STEEL COMP 1146
ST0165	STEEL COMP 303MA
ST0162	STEEL COMP D6AC
ST1993	STEEL PROPERTY CLASS 6.8
ST1294	STEEL UNS K03104
TNA000	TUNGSTEN
TNC000	TUNGSTEN ALLOY
VNA000	VANADIUM
VNB000	VANADIUM ALLOY
ZNA000	ZINC ALLOY

Table 6

COLORS

THIS TABLE IS FOR MRC HUES.

REPLY CODE	REPLY (AD06)
BE0000	BEIGE
BL0000	BLACK
BU0000	BLUE
MS0065	BRONZE
CR0000	CREAM
GL0000	GOLD
GY0000	GRAY
GR0000	GREEN
MA0000	MAROON
NA0000	NATURAL
LD0000	OLIVE DRAB
RE0000	RED
SL0000	SILVER
TA0000	TAN
WH0000	WHITE
YE0000	YELLOW

Table 7

FEATURES PROVIDED

THIS TABLE IS FOR MRC CBBL.

REPLY CODE	REPLY (AN47)
CQU	BOOT TYPE WASHER
CMU	BUSHING
AEQ	CASEHARDENED
CQV	CETYL ALCOHOL LUBRICANT
AFP	COTTER PIN
CVQ	DRY FILM LUBRICANT
CQW	FLAT WASHER
AFY	LOCK WASHER
BBL	LOCKNUT
AGA	O RING
CQY	RETAINING CLIP
ALT	SEALING RING
CRC	SQUARE NUT

Table 8

NONDEFINITIVE SPEC/STD DATA

THIS TABLE IS FOR MRC ZZZT.

REPLY CODE	REPLY (AD08)
AL	ALLOY
AN	ANNEX
AP	APPENDIX
AC	APPLICABILITY CLASS
AR	ARRANGEMENT
AS	ASSEMBLY
AB	ASSORTMENT
BX	BOX
CY	CAPACITY
CA	CASE
CT	CATEGORY
CL	CLASS
CE	CODE
CR	COLOR
CC	COMBINATION CODE
CN	COMPONENT
CP	COMPOSITION
CM	COMPOUND
CD	CONDITION
CS	CONSTRUCTION
DE	DESIGN
DG	DESIGNATOR
DW	DRAWING NUMBER
EG	EDGE
EN	END
FY	FAMILY
FG	FIGURE
FN	FINISH
FM	FORM
FA	FORMULA
GR	GRADE
GP	GROUP
NS	INSERT
TM	ITEM
KD	KIND
KT	KIT
LG	LENGTH
LT	LIMIT
MK	MARK
ML	MATERIAL
MH	MESH
ME	METHOD
MD	MODEL
MT	MOUNTING

REPLY CODE	REPLY (AD08)
NR	NUMBER
PT	PART
PN	PATTERN
PC	PHYSICAL CONDITION
PS	PIECE
PL	PLAN
PR	POINT
QA	QUALITY
RN	RANGE
RT	RATING
RF	REFERENCE NUMBER
SC	SCHEDULE
SB	SECTION
SL	SELECTION
SE	SERIES
SV	SERVICE
SX	SET
SA	SHADE
SH	SHAPE
SG	SHEET
SZ	SIZE
PZ	SPECIES
SQ	SPECIFICATION SHEET
SD	SPEED
ST	STYLE
SS	SUBCLASS
SF	SUBFORM
SP	SUBTYPE
SN	SURFACE CONDITION
SY	SYMBOL
SM	SYSTEM
TB	TABLE
TN	TANNAGE
TP	TEMPER
TX	TEXTURE
TK	THICKNESS
TT	TREATMENT
TR	TRIM
TY	TYPE
YN	UNIT
VA	VARIETY
WT	WEIGHT
WD	WIDTH

Table 9

PRECIOUS MATERIAL

THIS TABLE IS FOR MRC PRMT.

REPLY CODE	REPLY (MA01)
AUA000	GOLD
IRA000	IRIDIUM
AZA000	OSMIUM
PDA000	PALLADIUM
PTA000	PLATINUM
RHA000	RHODIUM
RTA000	RUTHENIUM
AGA000	SILVER

(BLANK PAGE)

INDEX TO APPENDIX B

REFERENCE DRAWING	Page No.
INDEX OF MASTER REQUIREMENT CODES	31
GROUP A - GIZMO STYLES	33 through 36
GROUP B - WIDGET STYLES	37 and 38

(BLANK PAGE)

FIIG A499
APPENDIX B

REFERENCE DRAWING GROUPS A AND B

INDEX OF MASTER REQUIREMENT CODES

GIZMO AND WIDGET STYLES

Enter the applicable Reply Codes from Tables 1 and 2 below, followed by the numeric value. (e.g., AATKJAA0.375*; AATKJLA6.3*; AATKJAB0.188$$JAC0.193*)

Table 1

REPLY CODE	REPLY (AA05)
A	INCHES
L	MILLIMETERS

Table 2

REPLY CODE	REPLY (AC20)
A	NOMINAL
B	MINIMUM
C	MAXIMUM

MRC	Mode Code	Name of Dimension
AATK	J	EYE INSIDE DIAMETER
AATP	J	SHOULDER THICKNESS
AATR	J	SHANK LENGTH
AATZ	J	EYE STOCK DIAMETER
AAUA	J	EYE STOCK THICKNESS
AAUD	J	HOOK INSIDE WIDTH
AAUE	J	DISTANCE FROM INSIDE CENTER OF BEND TO HOOK END
AAUF	J	HOOK OPENING WIDTH
AAVH	J	SHOULDER DIAMETER
AAWV	J	DISTANCE FROM INSIDE CENTER OF BEND TO BOLT END
AAWW	J	INSIDE DISTANCE BETWEEN SHANKS
AAZE	J	SHANK DIAMETER
ABHP	J	OVERALL LENGTH
CQZR	J	DISTANCE FROM INSIDE OF BEND TO SHANK END
CRHT	J	DISTANCE FROM CENTER OF EYE TO SHANK END
CWXM	J	EYE OUTSIDE WIDTH

FIIG A499
APPENDIX B

REFERENCE DRAWING GROUPS A AND B

(BLANK PAGE)

FIIG A499
APPENDIX B

REFERENCE DRAWING GROUP A

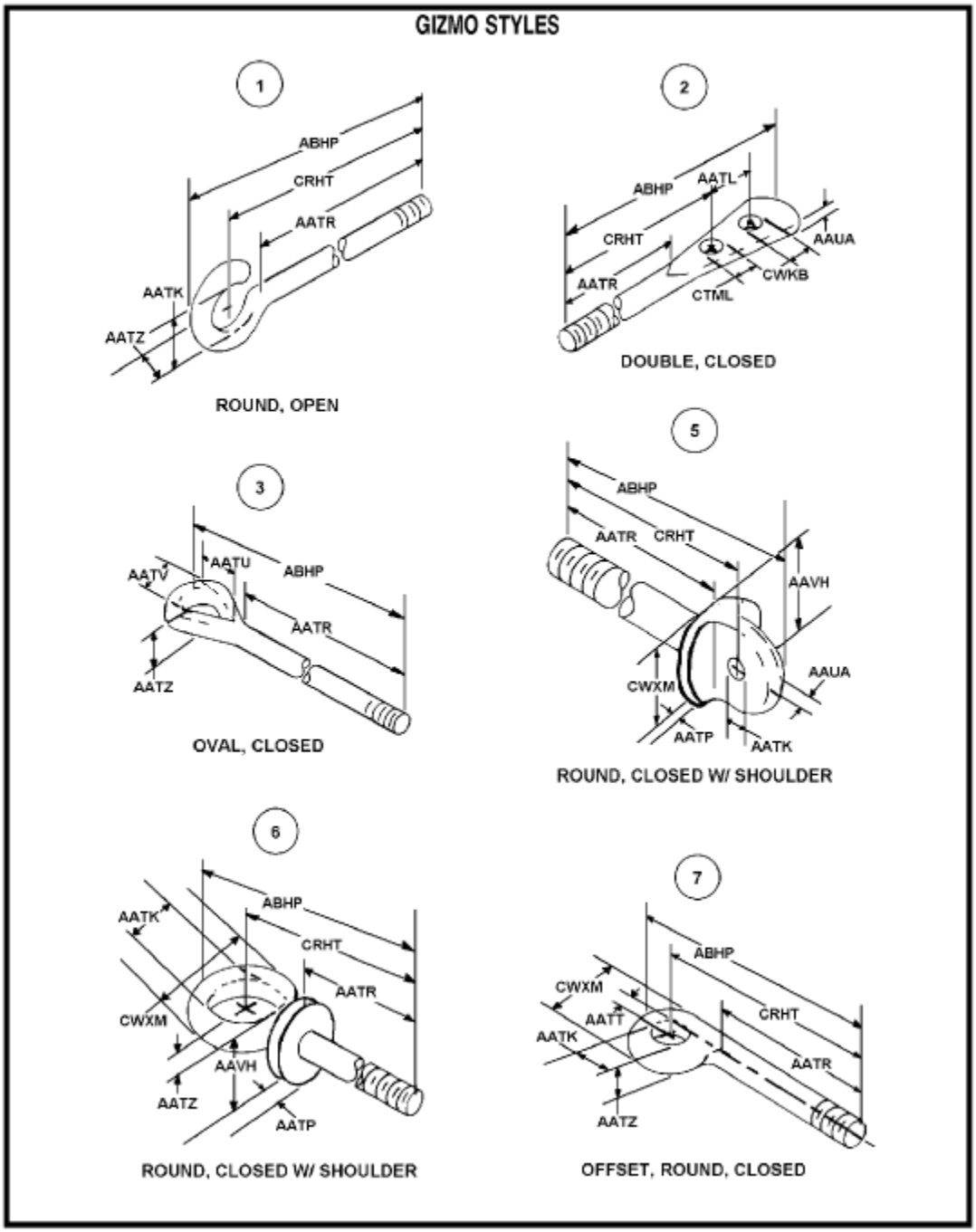

FIIG A499
APPENDIX B

REFERENCE DRAWING GROUP A

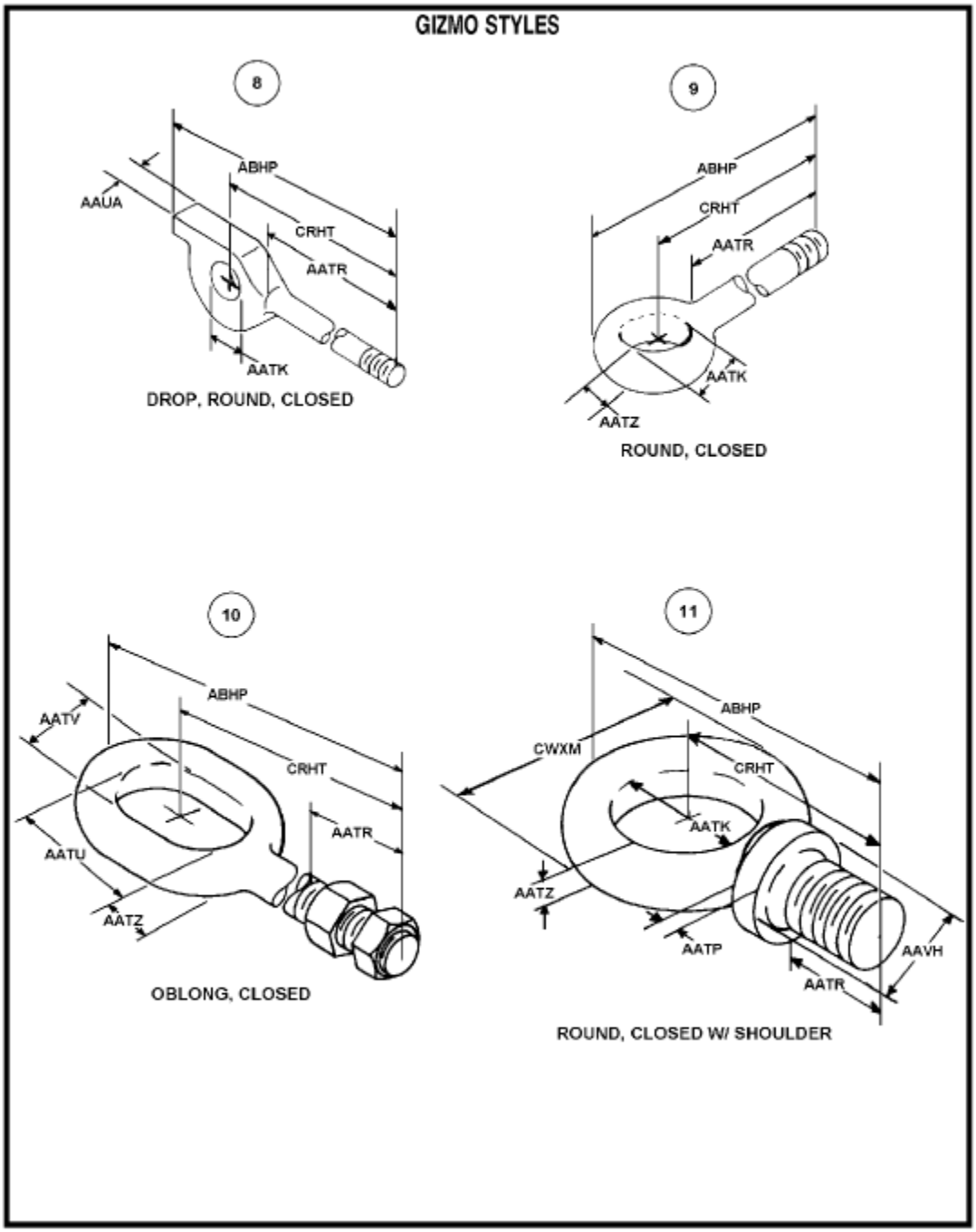

FIIG A499
APPENDIX B

REFERENCE DRAWING GROUP A

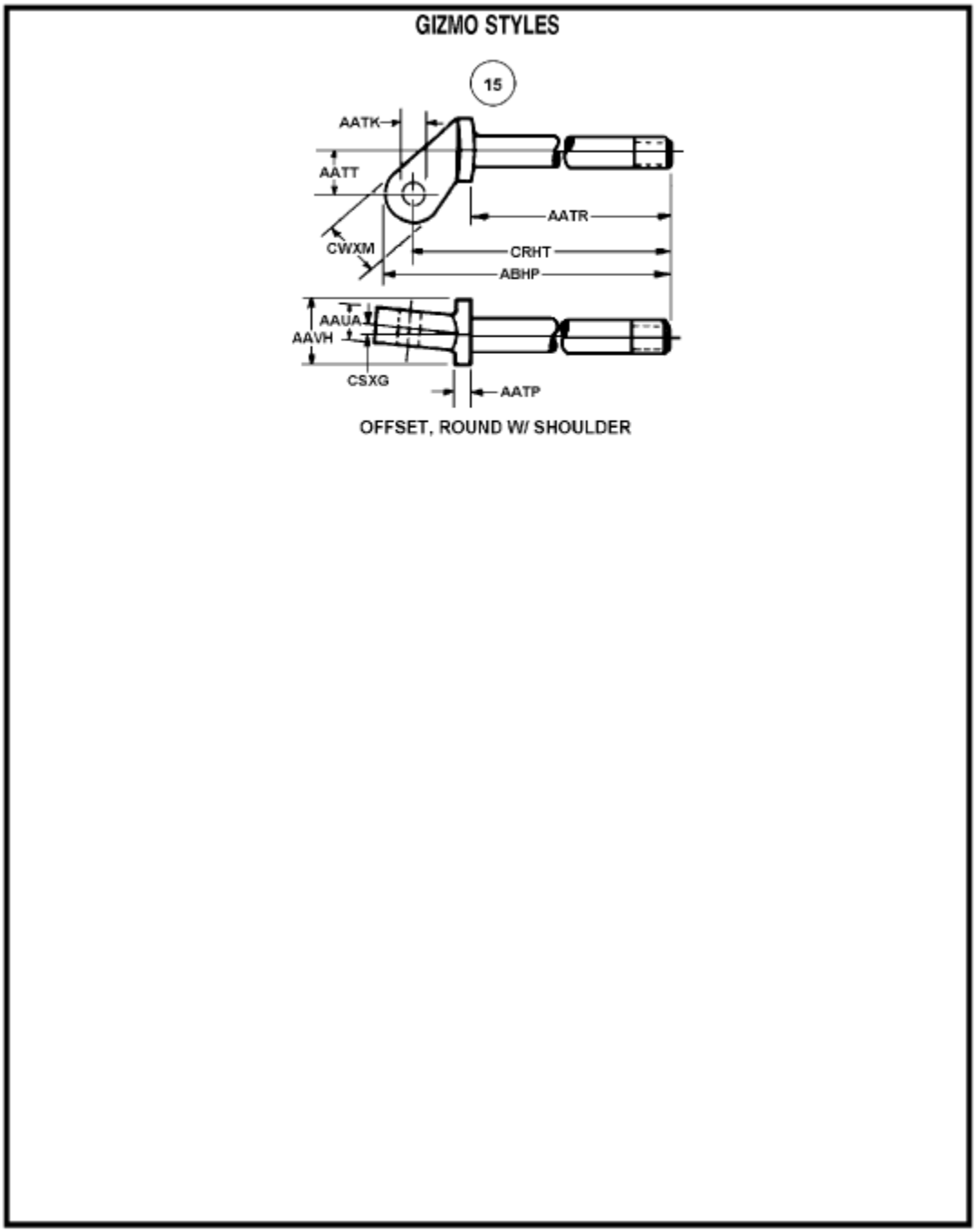

FIIG A499
APPENDIX B

REFERENCE DRAWING GROUP A

(BLANK PAGE)

FIIG A499
APPENDIX B

REFERENCE DRAWING GROUP B

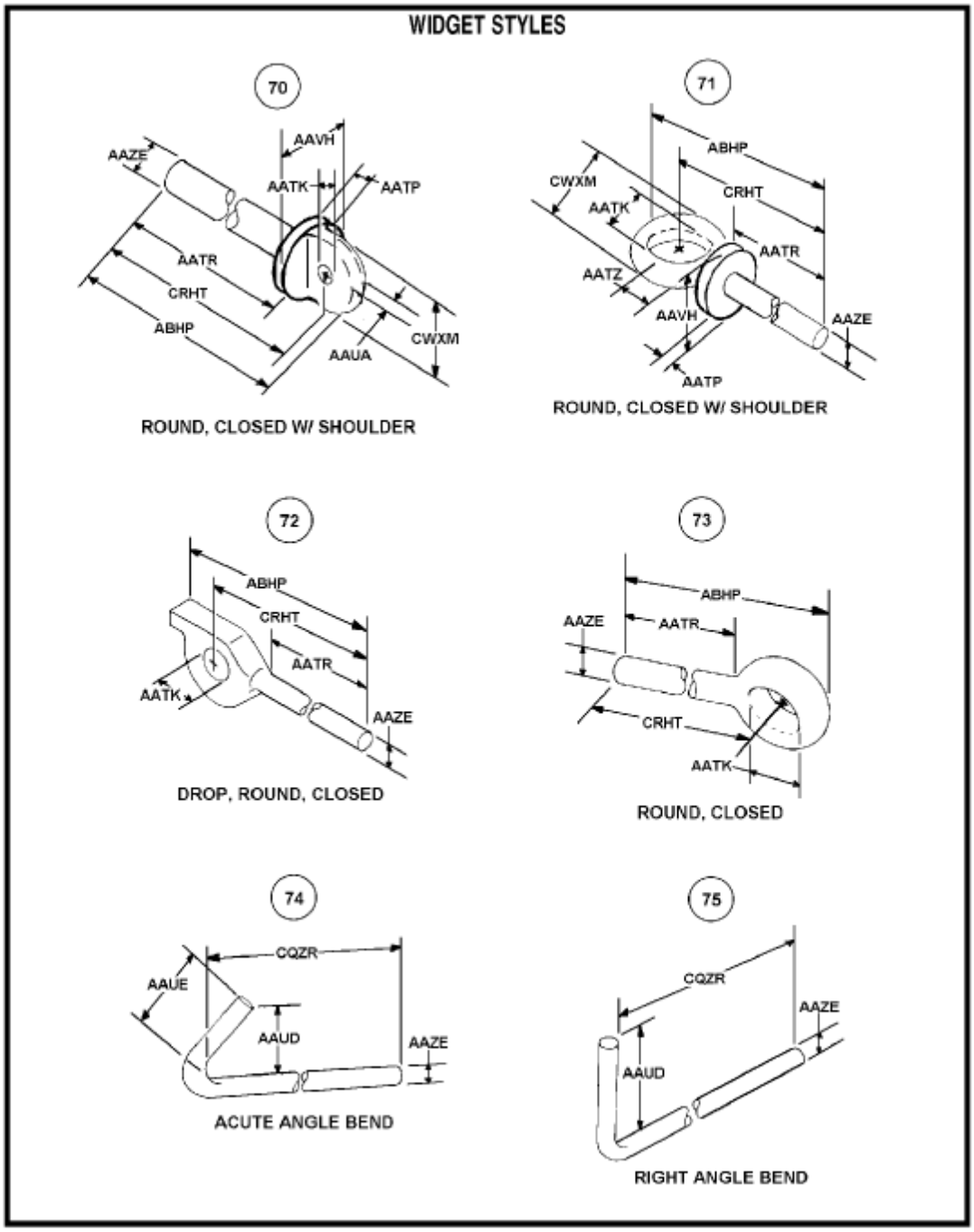

FIIG A499
APPENDIX B

REFERENCE DRAWING GROUP B

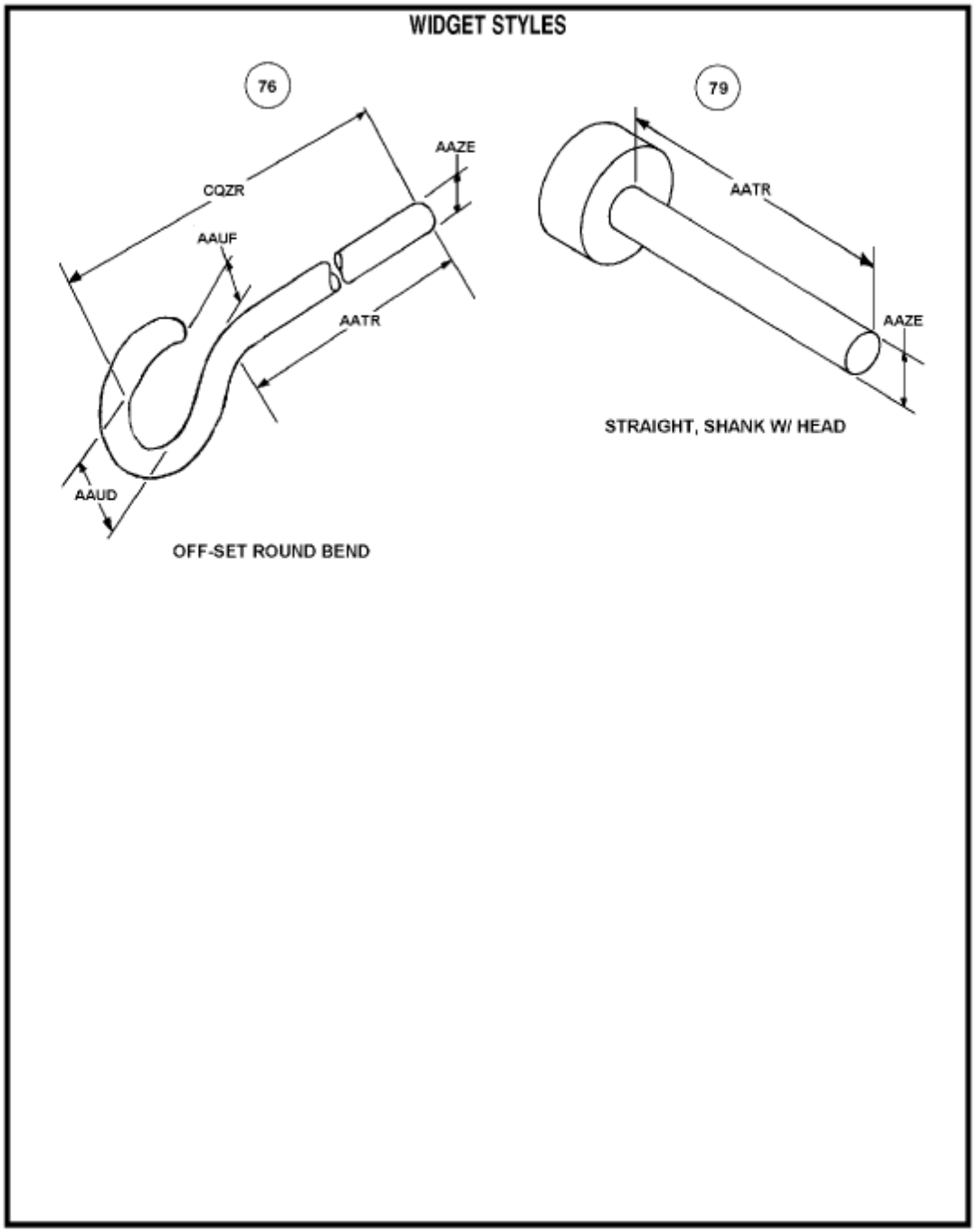

INDEX TO APPENDIX C

	Page No.
Table 1 - STANDARD FRACTION TO DECIMAL CONVERSION CHART	41
Table 2 - INCH TO MILLIMETER CONVERSION CHART	42 through 45

(BLANK PAGE)

Table 1

STANDARD FRACTION TO DECIMAL CONVERSION CHART

					Places							Places	
4ths	8ths	16ths	32nds	64ths	To 3	To 4	4ths	8ths	16ths	32nds	64ths	To 3	To 4
				1/64	.016	.0156					33/64	.516	.5156
			1/32	-----	.031	.0312				17/32	------	.531	.5312
				3/64	.047	.0469					35/64	.547	.5469
		1/16	----------		.062	.0625			9/16	----------		.562	.5625
				5/64	.078	.0781					37/64	.578	.5781
			3/32	-----	.094	.0938				19/32	------	.594	.5938
				7/64	.109	.1094					39/64	.609	.6094
	1/8	----------			.125	.1250		5/8	----------			.625	.6250
				9/64	.141	.1406					41/64	.641	.6406
			5/32	-----	.156	.1562				21/32	------	.656	.6562
				11/64	.172	.1719					43/64	.672	.6719
		3/16	----------		.188	.1875			11/16	----------		.688	.6875
				13/64	.203	.2031					45/64	.703	.7031
			7/32	------	.219	.2188				23/32	------	.719	.7188
				15/64	.234	.2344					47/64	.734	.7344
1/4	----------				.250	.2500	3/4	----------				.750	.7500
				17/64	.266	.2656					49/64	.766	.7656
			9/32	------	.281	.2812				25/32	------	.781	.7812
				19/64	.297	.2969					51/64	.797	.7969
		5/16	----------		.312	.3125			13/16	----------		.812	.8125
				21/64	.328	.3281					53/64	.828	.8281
			11/32	------	.344	.3438				27/32	------	.844	.8438
				23/64	.359	.3594					55/64	.859	.8594
	3/8	----------			.375	.3750		7/8	----------			.875	.8750
				25/64	.391	.3906					57/64	.891	.8906
			13/32	------	.406	.4062				29/32	------	.906	.9062
				27/64	.422	.4219					59/64	.922	.9219
		7/16	----------		.438	.4375			15/16	----------		.938	.9375
				29/64	.453	.4531					61/64	.953	.9531
			15/32	------	.469	.4688				31/32	------	.969	.9688
				31/64	.484	.4844					63/64	.984	.9844
					.500	.5000						1.000	1.0000

Table 2

INCH TO MILLIMETER CONVERSION TABLE

Fractional Equivalent	Decimal	Milli-meters	Fractional Equivalent	Decimal	Milli-meters
	0.005	0.13		0.114	2.90
	0.010	0.25		0.115	2.92
1/64″	0.1560	0.3969		0.116	2.95
	0.017	0.43		0.117	2.97
	0.020	0.51		0.121	3.07
	0.025	0.64		0.122	3.10
	0.030	0.76	1/8″	0.1250	3.1750
1/32″	0.0312	0.7937		0.126	3.20
	0.032	0.81		0.127	3.23
	0.035	0.89		0.130	3.30
	0.039	0.99		0.135	3.43
	0.040	1.02		0.136	3.45
3/64″	0.0468	1.1906		0.139	3.53
	0.048	1.22	9/64″	0.1406	3.5719
	0.050	1.27		0.141	3.58
	0.052	1.32		0.143	3.63
	0.055	1.40		0.144	3.66
	0.057	1.45		0.145	3.68
	0.059	1.50		0.147	3.73
	0.060	1.52		0.150	3.81
1/16″	0.0625	1.5875		0.152	3.86
	0.065	1.65		0.155	3.94
	0.066	1.68	5/32″	0.1562	3.9687
	0.067	1.70		0.157	3.99
	0.068	1.73		0.160	4.06
	0.070	1.78		0.162	4.11
	0.073	1.85		0.163	4.14
	0.075	1.90		0.164	4.17
	0.077	1.96		0.165	4.19
5/64″	0.0781	1.9844		0.166	4.22
	0.080	2.03		0.170	4.32
	0.086	2.18	11/64″	0.1718	4.3656
	0.088	2.24		0.172	4.37
	0.090	2.27		0.175	4.44
	0.092	2.34		0.176	4.47
3/32″	0.0937	2.3812		0.180	4.57
	0.096	2.44		0.182	4.62
	0.097	2.46		0.185	4.70
	0.100	2.54	3/16″	0.1875	4.7625
	0.105	2.67		0.188	4.78
	0.108	2.74		0.192	4.88
7/64″	0.1093	2.7781		0.198	5.03
	0.110	2.79		0.200	5.08
	0.113	2.87		0.201	5.11

Fractional Equivalent	Decimal	Milli-meters	Fractional Equivalent	Decimal	Milli-meters
13/64″	0.2031	5.1594		0.324	8.23
	0.208	5.28		0.325	8.26
	0.210	5.33		0.326	8.28
	0.212	5.38	21/64″	0.3281	8.3344
	0.215	5.46		0.330	8.38
	0.217	5.51		0.333	8.46
7/32″	0.2187	5.5562		0.338	8.58
	0.219	5.56		0.340	8.64
	0.220	5.59	11/32″	0.3437	8.7312
	0.221	5.61		0.344	8.74
	0.225	5.72		0.350	8.89
	0.229	5.82		0.355	9.02
	0.230	5.84	23/64″	0.3593	9.1281
15/64″	0.2343	5.9531		0.360	9.14
	0.235	5.97		0.365	9.27
	0.238	6.04		0.370	9.40
	0.240	6.10	3/8″	0.3750	9.5250
	0.242	6.15		0.376	9.55
	0.243	6.17		0.380	9.65
1/4″	0.2500	6.3500		0.385	9.78
	0.252	6.40	25/64″	0.3906	9.9219
	0.260	6.60		0.395	10.03
17/64″	0.2656	6.7469		0.400	10.16
	0.267	6.78		0.402	10.21
	0.270	6.86	13/32″	0.4062	10.3187
	0.273	6.93		0.407	10.34
	0.275	6.98		0.410	10.41
	0.276	7.01		0.411	10.44
9/32″	0.2812	7.1437		0.415	10.54
	0.282	7.16		0.416	10.57
	0.283	7.19	27/64″	0.4218	10.7156
	0.284	7.21		0.420	10.67
	0.287	7.29		0.422	10.72
	0.288	7.32		0.430	10.92
	0.290	7.37		0.432	10.97
	0.291	7.39		0.434	11.02
	0.295	7.49	7/16″	0.4375	11.1125
19/64″	0.2968	7.5406		0.438	11.12
	0.298	7.57		0.440	11.18
	0.300	7.62		0.444	11.30
	0.304	7.72		0.447	11.35
	0.310	7.87		0.450	11.43
5/16″	0.3125	7.9375	29/64″	0.4531	11.5094
	0.315	8.00		0.457	11.61
	0.317	8.05		0.461	11.71
	0.320	8.13		0.465	11.81
	0.323	8.20	15/32″	0.4687	11.9062

Fractional Equivalent	Decimal	Milli-meters	Fractional Equivalent	Decimal	Milli-meters
	0.469	11.91		0.660	16.76
	0.470	11.94		0.665	16.89
	0.475	12.07		0.670	17.02
	0.480	12.19	43/64″	0.6718	17.0656
31/64″	0.4843	12.3031		0.675	17.14
	0.486	12.34		0.680	17.27
	0.490	12.45	11/16″	0.6875	17.4625
	0.492	12.50		0.688	17.48
	0.497	12.62		0.690	17.53
1/2″	0.5000	12.7000		0.695	17.65
	0.505	12.83		0.700	17.78
	0.509	12.93	45/64″	0.7031	17.8594
	0.510	12.95		0.705	17.91
33/64″	0.5156	13.0868		0.710	18.03
	0.520	13.21		0.715	18.16
	0.525	13.34	25/32″	0.7187	18.2562
	0.528	13.41		0.720	18.29
	0.530	13.46		0.725	18.42
17/32″	0.5312	13.4937		0.730	18.54
	0.536	13.61	47/64″	0.7343	18.6532
	0.540	13.72		0.735	18.67
	0.545	13.84		0.737	18.72
35/64″	0.5468	13.8906		0.740	18.80
	0.550	13.97		0.745	18.92
	0.555	14.10	3/4″	0.7500	19.0500
9/16″	0.5625	14.2875		0.753	19.13
	0.564	14.33		0.760	19.30
	0.570	14.48	49/64″	0.7656	19.4469
	0.572	14.53		0.770	19.56
37/64″	0.5781	14.6844		0.775	19.68
	0.58	14.73		0.780	19.81
	0.585	14.86	25/32″	0.7812	19.8433
19/32″	0.5937	15.0812		0.785	19.94
	0.600	15.24		0.790	20.07
	0.604	15.34		0.795	20.19
39/64″	0.6093	15.4781	51/64″	0.7968	20.2402
	0.610	15.49		0.798	20.27
	0.615	15.62		0.800	20.32
	0.620	15.75		0.805	20.45
5/8″	0.6250	15.8750		0.810	20.57
	0.630	16.00	13/16″	0.8125	20.6375
	0.635	16.13		0.815	20.70
	0.638	16.21		0.820	20.83
41/64″	0.6406	16.2719		0.825	20.96
	0.645	16.38	53/64″	0.8281	21.0344
	0.650	16.51		0.829	21.06
21/32″	0.6562	16.6687		0.835	21.21

Fractional Equivalent	Decimal	Milli-meters	Fractional Equivalent	Decimal	Milli-meters
	0.840	21.34		1.062	26.97
27/32″	0.8437	21.4312		1.063	27.00
	0.844	21.44		1.064	27.03
	0.850	21.59		1.068	27.13
	0.855	21.72		1.094	27.79
55/64″	0.8593	21.8281		1.100	27.94
	0.860	21.84	1 1/8″	1.125	28.58
	0.865	21.97		1.170	29.72
	0.870	22.10		1.200	30.48
7/8″	0.8750	22.2250		1.218	30.94
	0.880	22.35	1 1/4″	1.250	31.75
	0.885	22.48		1.270	32.26
57/64″	0.8906	22.6219		1.282	32.56
	0.895	22.73		1.285	32.64
	0.900	22.86		1.293	32.84
29/32″	0.9062	23.0187		1.300	33.02
	0.910	23.11		1.370	34.80
	0.915	23.24	1 3/8″	1.375	34.92
	0.920	23.37		1.390	35.31
59/64″	0.9218	23.4156		1.480	37.59
	0.925	23.50		1.495	37.93
	0.930	23.62	1 1/2″	1.500	38.10
	0.935	23.75		1.550	39.37
15/16″	0.9375	23.8125		1.563	39.70
	0.938	23.83	1 5/8″	1.625	41.275
	0.940	23.88		1.630	41.40
	0.945	24.00		1.687	42.85
	0.950	24.13	1 3/4″	1.750	44.45
61/64″	0.9531	24.2094		1.837	46.66
	0.955	24.27		1.858	47.19
	0.960	24.38	1 7/8″	1.875	47.62
	0.965	24.51		1.937	49.20
31/32″	0.9687	24.6062		1.940	49.28
	0.970	24.64	2″	2.000	50.80
	0.975	24.77		2.030	51.56
	0.980	24.89		2.031	51.59
63/64″	0.9843	25.0031		2.063	52.40
	0.985	25.02	2 1/8″	2.125	53.98
	0.990	25.15		2.171	55.14
	0.995	25.27		4.590	116.59
1″	1.000	25.4000			
	1.045	26.54			
	1.060	26.92			

APPENDIX 3-3-B
SAMPLE OF NEW CONCEPT FIIG

FIIG A999Z

Effective Date: 8 Apr 94

FEDERAL ITEM IDENTIFICATION GUIDE

PAD, MOUSE

ITEM NAME CODE

50658

COMMANDER
DEFENSE SUPPLY CENTER COLUMBUS
ATTN: DSCC-VLF (ELECTRICAL/ELECTRONIC)
COLUMBUS, OH 43216-5000
(COMM) (614) 692-8754
(DSN) 850-8754

PUBLISHED BY DEFENSE LOGISTICS INFORMATION SERVICE, BATTLE CREEK, MI

This Federal Item Identification Guide for Supply Cataloging is issued under the authority of Department of Defense Instruction 5025.7.

The use of this publication is mandatory for U.S.Federal Activities participating in Federal Catalog System Operations.

BY ORDER OF THE DIRECTOR

ROBERT L. SONGER
Colonel, USMC
Commander
Defense Logistics Information Service

MRC	Mode Code	Requirements

NAME **D** **ITEM NAME**

Definition: A NOUN, WITH OR WITHOUT MODIFIERS, BY WHICH AN ITEM OF SUPPLY IS KNOWN.

Reply Instructions: Enter the Item Name Code applicable to this FIIG. (e.g., NAMED50658*)

HUES **D** **COLOR**

Definition: A CHARACTERISTIC OF LIGHT THAT CAN BE SPECIFIED IN TERMS OF LUMINANCE, DOMINANT WAVELENGTH, AND PURITY.

Reply Instructions: Enter the applicable Reply Code from the table below. (e.g., HUESDBL0000*)

REPLY CODE	REPLY (AD06)
BL0000	BLACK
BU0000	BLUE
GY0000	GRAY
GR0000	GREEN
RG0000	ORANGE
PU0000	PURPLE
RE0000	RED
WH0000	WHITE
YE0000	YELLOW

ABHP * **J** **OVERALL LENGTH**

Definition: THE DIMENSION MEASURED ALONG THE LONGITUDINAL AXIS WITH TERMINATED POINTS AT THE EXTREME ENDS OF THE ITEM.

Reply Instructions: Enter the applicable Reply Code from Tables 1 and 2 below, followed by the numeric value. (e.g., ABHPJAA3.500*; ABHPJAB2.500$$JAC3.500*; ABHPJLA25.4*)

Table 1

REPLY CODE	REPLY (AA05)
A	INCHES
L	MILLIMETERS

Table 2

REPLY CODE	REPLY (AC20)
A	NOMINAL
B	MINIMUM
C	MAXIMUM

MRC	Mode Code	Requirements

ABMK * **J** **OVERALL WIDTH**

Definition: AN OVERALL MEASUREMENT TAKEN AT RIGHT ANGLES TO THE LENGTH OF AN ITEM, IN DISTINCTION FROM THICKNESS.

Reply Instructions: Enter the applicable Reply Code from Tables 1 and 2 below, followed by the numeric value. (e.g., ABMKJAA1.385*; ABMKJAB1.250$$JAC1.500*; ABMKJLA25.4*)

Table 1

REPLY CODE	REPLY (AA05)
A	INCHES
L	MILLIMETERS

Table 2

REPLY CODE	REPLY (AC20)
A	NOMINAL
B	MINIMUM
C	MAXIMUM

ADAV * **J** **OVERALL DIAMETER**

Definition: A MEASUREMENT OF THE LONGEST STRAIGHT LINE ACROSS A CIRCULAR CROSS-SECTIONAL PLANE.

Reply Instructions: Enter the applicable Reply Code from Tables 1 and 2 below, followed by the numeric value. (e.g., ADAVJAA10.750*; ADAVJAB10.250$$JAC10.500*; ABMKJLA60.9*)

Table 1

REPLY CODE	REPLY (AA05)
A	INCHES
L	MILLIMETERS

Table 2

REPLY CODE	REPLY (AC20)
A	NOMINAL
B	MINIMUM
C	MAXIMUM

MRC	Mode Code	Requirements
TEST *	**J**	**TEST DATA DOCUMENT**

Definition: THE SPECIFICATION, STANDARD, DRAWING, OR SIMILAR INSTRUMENT THAT SPECIFIES ENVIRONMENTAL AND PERFORMANCE REQUIREMENTS OR TEST CONDITIONS UNDER WHICH AN ITEM IS TESTED AND ESTABLISHES ACCEPTABLE LIMITS WITHIN WHICH THE ITEM MUST CONFORM IDENTIFIED BY AN ALPHABETIC AND/OR NUMERIC REFERENCE NUMBER. INCLUDES THE COMMERCIAL AND GOVERNMENT ENTITY (CAGE) CODE OF THE ENTITY CONTROLLING THE INSTRUMENT.

Reply Instructions: Enter the applicable reply code from the table below, followed by the 5-position CAGE code, a dash, and the document identification number. (e.g., TESTJA12345-CWX654321*; TESTJA12345-654321$$JB5556A66354*; TESTJA12345-654321$JB55566-663654*)

REPLY CODE	REPLY (AC28)
A	SPECIFICATION (includes engineering type bulletins, brochures, etc., that reflect specification type data in specification format; excludes commercial catalogs, industry directories, and similar trade publications, reflecting general type data on certain environmental and performance requirements and test conditions that are shown as "typical", "average", "nominal", etc.)
B	STANDARD (includes industry or association standards, individual manufacturer standards, etc.)
C	DRAWING (this is the basic governing drawing, such as a contractor drawing, original equipment manufacturer drawing, etc; excludes any specification, standard, or other document that may be referenced in a basic governing drawing.)

FEAT * **G** **SPECIAL FEATURES**

Definition: THOSE UNUSUAL OR UNIQUE CHARACTERISTICS OR QUALITIES OF AN ITEM NOT COVERED IN THE OTHER REQUIREMENTS AND WHICH ARE DETERMINED TO BE ESSENTIAL FOR IDENTIFICATION.

Reply Instructions: Enter the reply in clear text. (e.g., FEATGQUALITY CONTROLLED*)

MRC	Mode Code	Requirements
ZZZK *	**J**	**SPECIFICATION/STANDARD DATA**

Definition: THE DOCUMENT DESIGNATOR OF THE SPECIFICATION OR STANDARD WHICH ESTABLISHED THE ITEM OF SUPPLY.

Reply Instructions: Enter the applicable Reply Code from the table below, followed by the Commercial and Government Entity (CAGE) Code of the entity controlling the document, a dash, and the document designator. The agency that controls the limited coordination document must be preceded and followed by a slash following the designator. The word canceled or superseded must be preceded and followed by a slash for the designator. Professional and industrial association specifications/standards are differentiated from a manufacturer's specification in that the data has been coordinated and published by the professional and industrial association. Include amendments and revisions where applicable.
(e.g., ZZZKJT81337-30642B*;
ZZZKJS81349-MIL-D-180 REV1/CANCELED/*;
ZZZKJP80205-NAS1103*;
ZZZKJS81349-MIL-C-1140C/CE/*;
ZZZKJT81337-30642B$$JP80205-NAS1103*)

REPLY CODE	REPLY (AN62)
S	GOVERNMENT SPECIFICATION
T	GOVERNMENT STANDARD
D	MANUFACTURERS SOURCE CONTROL
R	MANUFACTURERS SPECIFICATION
N	MANUFACTURERS SPECIFICATION CONTROL
M	MANUFACTURERS STANDARD
A	PROFESSIONAL/INDUSTRIAL ASSOCIATION SPECIFICATION
P	PROFESSIONAL/INDUSTRIAL ASSOCIATION STANDARD

ZZZT * **J** **NONDEFINITIVE SPEC/STD DATA**

NOTE: If the specification/standard cited in reply to MRC ZZZK is nondefinitive, reply to MRC ZZZT. This reply is the data which is not recorded in Segment C.

Definition: THE NUMBER, LETTER, OR SYMBOL THAT INDICATES THE TYPE, STYLE, GRADE, CLASS, AND THE LIKE, OF AN ITEM IN A NONIDENTIFYING SPECIFICATION OR STANDARD.

Reply Instructions: Enter the applicable Reply Code from Appendix A, followed by the appropriate number, letter, or symbol. (e.g., ZZZTJTY1*; ZZZTJTY1$$JSTA*; ZZZTJTY1$JSTA*)

MRC	Mode Code	Requirements
ZZZY *	**G**	**REFERENCE NUMBER DIFFERENTIATING CHARACTERISTICS**

Definition: A FEATURE OF THE ITEM OF SUPPLY WHICH MUST BE SPECIFICALLY RECORDED WHEN THE REFERENCE NUMBER COVERS A RANGE OF ITEMS.

Reply Instructions: Enter the reply in clear text. (e.g., ZZZYGCOLOR CODED LEADS*; ZZZYGAS DIFFERENTIATED BY MATERIAL*)

CRTL * **A** **CRITICALITY CODE JUSTIFICATION**

Definition: THE MASTER REQUIREMENT CODES OF THOSE REQUIREMENTS WHICH ARE TECHNICALLY CRITICAL BY REASON OF TOLERANCE, FIT, PERFORMANCE, OR OTHER CHARACTERISTICS WHICH AFFECT IDENTIFICATION OF THE ITEM.

Reply Instructions: Enter the Master Requirement Code for the requirement, the reply to which renders the item as being critical. (e.g., CRTLAAKJA*; CRTLAAKJA$$ACSGS*)

Reply to this requirement only if the header record for the item identification for the item being identified has been coded as critical.

PRPY * **A** **PROPRIETARY CHARACTERISTICS**

NOTE: If Document Availability Code B, D, F, or H, reply to MRC PRPY.

Definition: IDENTIFICATION OF THOSE CHARACTERISTICS INCLUDED IN THE DESCRIPTION FOR WHICH A NON-GOVERNMENT ACTIVITY HAS IDENTIFIED ALL OR SELECTED CHARACTERISTICS OF THE ITEM AS BEING PROPRIETARY AND THEREFORE RESTRICTED FROM RELEASE OUTSIDE THE GOVERNMENT WITHOUT PRIOR PERMISSION OF THE ORIGINATOR OF THE DATA.

Reply Instructions: Enter the MRC codes of the individual characteristics of the description which are marked proprietary on the technical data, using AND coding ($$) for multiple characteristics. If all the MRCs are proprietary, enter the reply PACS. If none of the MRCs is proprietary, enter the reply NPAC. (e.g., PRPYAPACS*; PRPYANPAC*; PRPYAAKJA$$ACSGS*)

MRC	Mode Code	Requirements
ELRN *	**G**	**EXTRA LONG REFERENCE NUMBER**

Definition: A REFERENCE NUMBER EXCEEDING 32 POSITIONS.

Reply Instructions: Enter the entire reference number. Do not include the 5-position Commercial and Government Entity (CAGE) Code. (e.g., ELRNGANN112036BIL060557LEN0313605UZ062365*)

In determining quantity of characters in the reference number, count will be made after modification in accordance with Volume 2, Chapter 9, FLIS Procedures Manual, DoD 4100.39-M.

CLQL *	**G**	**COLLOQUIAL NAME**

Definition: A COMMON USAGE NAME BY WHICH AN ITEM IS KNOWN.

Reply Instructions: Enter a unique colloquial name in clear text. (e.g., CLQLGWOVEN WIRE CLOTH*)

INDEX TO APPENDIX A

	Page No.
Table 1 - NONDEFINITIVE SPEC/STD DATA	9 and 10

(BLANK PAGE)

Table 1

NONDEFINITIVE SPEC/STD DATA

REPLY CODE	REPLY (AD08)
AL	ALLOY
AN	ANNEX
AP	APPENDIX
AC	APPLICABILITY CLASS
AR	ARRANGEMENT
AS	ASSEMBLY
AB	ASSORTMENT
BX	BOX
CY	CAPACITY
CA	CASE
CT	CATEGORY
CL	CLASS
CE	CODE
CR	COLOR
CC	COMBINATION CODE
CN	COMPONENT
CP	COMPOSITION
CM	COMPOUND
CD	CONDITION
CS	CONSTRUCTION
DE	DESIGN
DG	DESIGNATOR
DW	DRAWING NUMBER
EG	EDGE
EN	END
FY	FAMILY
FG	FIGURE
FN	FINISH
FM	FORM
FA	FORMULA
GR	GRADE
GP	GROUP
NS	INSERT
TM	ITEM
KD	KIND
KT	KIT
LG	LENGTH
LT	LIMIT
MK	MARK
ML	MATERIAL
MH	MESH
ME	METHOD
MD	MODEL
MT	MOUNTING
NR	NUMBER

FIIG A999Z
INC 50658
APPENDIX A

REPLY CODE	REPLY (AD08)
PT	PART
PN	PATTERN
PC	PHYSICAL CONDITION
PS	PIECE
PL	PLAN
PR	POINT
QA	QUALITY
RN	RANGE
RT	RATING
RF	REFERENCE NUMBER
SC	SCHEDULE
SB	SECTION
SL	SELECTION
SE	SERIES
SV	SERVICE
SX	SET
SA	SHADE
SH	SHAPE
SG	SHEET
SZ	SIZE
PZ	SPECIES
SQ	SPECIFICATION SHEET
SD	SPEED
ST	STYLE
SS	SUBCLASS
SF	SUBFORM
SP	SUBTYPE
SN	SURFACE CONDITION
SY	SYMBOL
SM	SYSTEM
TB	TABLE
TN	TANNAGE
TP	TEMPER
TX	TEXTURE
TK	THICKNESS
TT	TREATMENT
TR	TRIM
TY	TYPE
YN	UNIT
VA	VARIETY
WT	WEIGHT
WD	WIDTH

APPENDIX 3-3-C
NEW CONCEPT FIIGS

A. General Format Instructions for New Concept FIIGs

1. Data will be prepared in electronic format, readable by MS WORD Word Processing software, whenever possible. It may be transmitted to Logistics Information Services via floppy diskette or email attachment.

2. Reference Drawings will be submitted in hard copy when required, and in final printable form, if possible.

3. A capitalized title will appear, centered, at the top of each page, identifying the FIIG, INC (if applicable), Section and, when applicable, column headings.

4. Page breaks will be inserted by Logistics Information Services.

5. Page numbers will be machine generated at Logistics Information Services.

B. Cover Page

1. The FIIG cover will display the following information:

An identifying FIIG number and published or implementation date appearing in the upper-right corner. (This FIIG number is assigned at Logistics Information Services. It is a nonsignificant alpha-numeric code beginning with A500A, A500B, etc.)

2. The document will be titled “FEDERAL ITEM IDENTIFICATION GUIDE” and centered beneath will appear the Item Name Code (if applicable) and the Item Name (if applicable). If more than one name appears in the FIIG, the Service/Agency submitting the FIIG will also submit a name for the FIIG.

3. The name, address, and phone number of the Service/Agency responsible for the technical content of the publication.

4. Other information may be displayed as needed to further identify the document, note inclusion of changes or give instructions as to implementation.

C. Section I

New concept FIIG requirements will be constructed in the same format as other FIIG requirements except:

a. There will be no Applicability Keys.

b. All references to the requirements will be MRC (PAC is being eliminated).

c. Reply tables consisting of 25 or less replies and applicable to only one MRC will be located with the requirement in Section I. Tables applicable to more than one MRC or larger than 25 replies will be recorded in Appendix A of the New Concept FIIG.

d. Established MRCs will be used to the fullest extent possible. In those cases which require changes, such as revision to definitions, etc., a new MRC will be assigned. If it is determined by Logistics Information Services that the proposed requirement duplicates an established MRC, Logistics Information Services will contact the submitter to resolve the differences.

e. Legend letters and requirement numbers are prohibited.

f. Notes included with a requirement will not refer to note(s) for other requirements. Only the word "NOTE" will precede the narrative. All notes will stand alone for each MRC. Exceptions to this, such as tables in an Appendix, must be justified.

g. The following standard/administrative MRCs will be added to all New Concept FIIGs by Logistics Information Services: CRTL, PRPY, ELRN, and CLQL.

h. The following standard/supplementary MRCs will be added to all New Concept FIIGs unless specific instructions are provided by the Service/Agency initiating the New Concept FIIG to do otherwise: FEAT, ZZZK, ZZZT, ZZZY, and AGAV. (See sample FIIG in Appendix 3.3.B)

NOTE: THE MRCs LISTED ABOVE ARE NOT ALL INCLUSIVE OR STANDARD AND SUPPLEMENTARY MRCs, JUST THOSE THAT HAVE SPECIAL HANDLING IN NEW CONCEPT FIIGS.

i. The physical/performance MRCs will precede the standard MRCs and supplementary MRCs ,such as CLQL and AGAV, will follow.

j. Use of Secondary Address Coding is prohibited. Use of ISAC will be minimized to only that essential. This technique is for extending the MRC so that a unique address is provided for each application of the requirement in relation to the item and is authorized only as instructed within the requirement. Responses coded through this technique will always consist of the following (1) MRC, (2) Indicator Code (a single numeric character determined by the number of positions to follow (1,2,3), (3) Identified Secondary Address Code (1-3 digit alphabetic codes determined by the number of predicted replies), (4) the Mode Code, (5) The Reply Code and/or clear text response, and (6) end with a record separator (*). Steps (1) through (6) are repeated for each application of the requirement.

D. Appendix A

This Appendix will only contain tables with more than 25 replies or tables referenced to multiple MRCs.

a. All tables in Appendix A or Section I will be in alpha reply sequence with the exception of dimensional tables or if there is an underlying need to put them in some other logical sequence.

b. For MRC ZZZT, the standard reply table will be used and will be printed in each FIIG in which the MRC appears.

E. Appendix B

Reference drawings will be tailored as required for each FIIG. Reference drawings should be minimized by utilizing word description requirements, but only if easily understood.

F. Appendix C

1. When applicable, Standard Tables will be contained in Section C of the New Concept FIIG. See Section C Index of the New Concept FIIG sample in Appendix 3-3-B for a complete list of the Standard Tables contained within.

2. When developing a New Concept FIIG, references to Standard Tables formerly found in Appendix C of the FIIG, now shown in Section C of this publication, use the name of the table.

G. FIIG Example

See Appendix 3-3-B for example of FIIG annotated with specific format guidelines:

NOTE: This example of a FIIG is not an actual FIIG. Some of the drawings and other parts may be missing.

APPENDIX 3-3-D
COORDINATION ADDRESSES NEW CONCEPT FIIGS

General Services Administration
Federal Supply Service
Logistics Data Management Division
ATTN: FCRL - A
Washington, D.C. 20406

Commander
Logistics Information Services -KPN
Hart-Dole-Inouye Federal Center
74 Washington Avenue No. Ste. 7
Battle Creek, MI 49037–3084

APPENDIX 3-3-E
SAMPLE OF FIIG CROSS REFERENCE INFORMATION

CROSS REFERENCE MRCs for

FIIG-T999-Z INC 59999 TO A555Z0 INC 59999

MRCs that do not require any changes:

ABHP
AGAV
FEAT
PMLC
ZZZT
ZZZY

MRC(s) that can be deleted:

ZZZV

MRCs and reply codes requiring changes:

Old MRCs AARA AARB

Qty	Reply Code
1	AJ
1	AM
3	AN

Change to New MRC TTQY

Reply	Reply Code	Qty
Ferrule	AAH	1
PIN	AAM	1
SCREW	ABJ	3
BASE		

Old MRC MATL

Reply Code
A
ALC000
GS0000
PC0000
ST0000
Cadmium Selenide “E” mode

Change to New MRC MATT

Reply	Reply Code
ANY ACCEPTABLE	Delete Reply Code
Aluminum	ALA0000
Glass	GSA000
Plastic	PCA000
Steel	STA000
	CDB000

MRCs that cannot be crossed to another MRC:

ALGC	FEAT
Reply	Reply
0.391 IN. DIA HOLE	MOUNTING CONFIGURATION: 0.391 IN. DIA HOLE

ALBY	HYST USE SAC 1A
Reply Code*	Reply Code
AAT Indoor	1AUSAGE DESIGN: indoor
AAV Outdoor	1AUSAGE DESIGN: outdoor
AAT$$AAV	1AUSAGE DESIGN: indoor and outdoor

ASCM	HYST use SAC 1B
Reply Code*	Reply Code
A2400.0	1BGSPECTRAL RESPONSE IN ANGSTRUM UNITS AT 50% POWER MAXIMUM LEVEL:2400.0 NOMINAL

*MRC and reply codes must be decoded and written as clear text.

INDEX TO APPENDIX B

Rectangular Shapes

Group A - Replaced
Group B - Replaced with RDG A
Group C - Deleted

CROSS REFERENCE TO RDG A MRCs

AAZK - No Change
ABPM - No Change

RDG A - Changes within RDG A

Change Reply Code

1A to 1A
3A to 2A
4A to 3A
6A to 4A

8A to 5A

RDG B - Changes to RDG A

Change Reply Code

8B to 21A
16B to 22A
17B to 23A
23B to 24A

RDG C - Deleted

Tubular Shapes

Group J - Replace with RDG B

Group K - Deleted

RDG J - Change to RDG B

Change Reply Code

1J to 1B
6J to 3B
7J to 2B
8J to 4B
10J to 5B

RDG K - Deleted

Schematic Diagrams

Group R - Replace with RDG C

RDG R - Change to RDG C

Change Reply Code

1R to 1C

2R to 2C
3R to 3C
5R to 4C
6R to 5C
7R to 6C

Overall Dimensions

Group T - Replace with RDG D

CROSS REFERENCE TO RDG T MRCs

ABHP - No Change, move to RDG D
ABMK - No Change, move to RDG D

RDG T - Change to RDG D

1T to 1D
2T to 2D
3T to 3D

CHAPTER 4
MILITARY STANDARD ITEM CHARACTERISTICS CODING STRUCTURE (MILSTICCS)

3.4.1 Introduction

a. References.

(1) ASDI&L Memorandum, 11 Oct 63, to the Assistant Secretaries of the Army (I&L), Navy (I&L),n Air Force (Materiel) and the Director, DLA, subject: Standard DoD Item Characteristics Coding System.

(2) ASD (I&L) Memorandum, 7 May 65, to the Director, DLA, subject: Standard DoD Item Characteristics Coding Structure.

(3) ASD (Comptroller) Memorandum, 22 Jun 65, subject: Assignment of Data Elements and Data Codes Standardization Responsibility - Military Standard Item Characteristics Coding Structure (MILSTICCS).

b. Background.

In recognition of the need for item characteristic information in support of several logistic functions (e.g., cataloging, provisioning screening, item entry control and the determination of interchangeability and substitution relationships) and the need to improve (through automation) the capabilities for processing such information, the Assistant Secretary of Defense (I&L), by memorandum dated 11 October 1963, directed that the Defense Logistics Agency (DLA), in coordination with the Military Departments, develop and implement a uniform coding structure for the Department of Defense. Pursuant to this memorandum, a joint Military Service/Defense Logistics Agency/General Services Administration (GSA) Task Group was established for the purpose of developing a standard DoD item characteristics coding structure to facilitate the automation of logistic data systems and procedures including, but not limited to, the functions indicated above. By memorandum dated 7 May 1965, the ASD (I&L) approved the concepts of a coding structure developed by the Task Group and directed the development of plans and procedures to implement it at the earliest possible date.

c. Purpose and Scope.

(1) The primary purpose of MILSTICCS is to facilitate the automated communication, processing and storage of item characteristic information in support of logistic functions through the exercise of certain disciplines in the preparation and presentation of the information to be automated. It also serves as a basis for the identification of potential data elements and related features for subsequent standardization.

(2) MILSTICCS is the single standard DoD coding structure for item characteristic information in support of logistic functions.

(3) MILSTICCS is applicable to all activities involved in the development and maintenance of Federal Item Identiification Guides (FIIGs) under the Federal Catalog System and to all other activities preparing requirements for coded item characteristic data.

(4) This Chapter constitutes the principles and defines the terms inherent in the MILSTICCS. It establishes the procedures involved in the definition and initial standardization of item characteristic requirements for logistic purposes and the assignment of codes to item characteristic requirements and item characteristic values. Procedures for the application of assigned codes in the execution of the various functional processes are excluded from this Chapter and are to be included in the systems documentation applicable to the various functions.

(5) Item characteristic data which are security classified are excluded from the provisions of this Chapter.

d. Explanation of Terms.

(1) Item Characteristics

(a) The physical makeup of the item.

(b) The kind of performance or service expected of the item by virtue of its physical makeup.

(c) The conditions to which the item must conform by virtue of its expected performance or service.

(e) Its application to other items.

(2) Federal Item Identification Guide (FIIG). A guide to the definition, sequence and kinds of data required to describe items of supply/production in terms of item characteristic information. A separate guide is developed for each item name or group of item names covering items of supply/production susceptible of description in terms of the same generic characteristics.

(3) Requirement. Any combination of words, abbreviations, numeral or symbols which call for a statement of an item characteristic. A requirement may be in the form of a direct question or in the form of a statement which implies a question and, therefore, directs that the question be answered. As used in MILSTICCS, the requirement must indicate in a precise manner the conditions and restrictions under which the characteristic is to be stated. Ususally such conditions and restrictions will specify the definition of the characteristic required and the scale and tolerance within which it is to be stated.

(4) Reply. The statement of an item characteristic, i.e., the answer to the specific or implied question raised by the requirement. A complete clear text reply consists of a specific characteristic value together with sufficient words, abbreviations or symbols to relate the value to the characteristic called for in the requirement. For example, in the reply “6 inches long overall,” the numeral “6” represents the value of the characteristic while the phrase “inches long overall” identifies the characteristic called for by the requirement. (See paragraph 3.4.2.d)

(5) Master Requirement Code (MRC). A four-position nonsignificant code assigned to each different approved requirement. The MRC serves to identify the item characteristic defined by the requirement. (See paragraph 3.4.2.c(2)(a))

(6) Reply Code. A code that represents an established reply to a requirement. Reply codes may be alphabetic or alphanumeric. (See paragraphs 3.4.1.d(4) and 3.4.2.d)

(7) Mode Code. A one-position alphabetic code assigned to each requirement that specifies the characteristic value of the requirement. (See paragraph 3.4.2.c(2)(b) and appendix 3-4-A)

(8) Master Requirements Directory (MRD). A file containing all approved requirements and the applicable approved replies in those cases where the replies are coded. (See paragraph 3.4.2.c) Each approved requirement is cross-referenced to its assigned Master Requirement Code, Mode Code and the applicable reply tables. (See appendix 3-4-A).

(9) Secondary Address Coding. A technique for extending master requirement codes to provide a distinctive address code for each characteristic value in those instances where the same characteristic is applicable to different features (e.g., components, parts, sections) of the same item. This technique also provides a means of identifying and sequencing characteristic values applicable to the various features of an item such that they may be related, one with the other, as necessary for adequate and proper identification of the item. (See paragraph 3.4.2.e and appendix 3-4-C)

(10) Secondary Address Code. A variable length alphabetic code used to extend the Master Requirement Code. The Secondary Address Code may be up to nine positions long.

(11) Secondary Address Indicator Code. A one-digit numeric code which indicates the number of characters in the Secondary Address Code.

(12) Record Separator. A symbol (#) used to designate the end of data pertaining to a single characteristic when data applicable to multiple characteristics are included in the same data record.

3.4.2 MILSTICCS Principles

a. Delination of Characteristics. The need for item characteristic coding arises when, within a particular project or program, there exists a requirement for developing item characteristic information in a manner suitable for automated communication and processing. The item characteristics to be coded under MILSTICCS are those required in support of authorized programs or projects and which are specified as “requirements” (see paragraph 3.4.1.d(3)) in the “Federal Item Identification Guide (FIIGS)” (see paragraph 3.4.1.d(2)) applicable to the program or project.

b. Control and Assignment of Codes. In order to ensure uniformity and the degree of standardization required for automation purposes, the Logistics Information Services is assigned responsibility for the assignment of all MILSTICCS codes, regardless of functional programs in which used, and for the publication

and distribution of codes. Assignment responsibility includes final review and format approval of requirements contained in the FIIGs as related to the manner in which requirements are stated. (See paragraph 3.4.2.c(1)(b) .)

c. Requirements Development and Coding.

(1) Requirements Development.

(a) A prerequisite to the automation of any data handling system is the standardization of input data. In order to achieve this required standardization, it is essential that each "requirement" be defined in precise terms so as to avoid any misinterpretation of the type of characteristic value (reply) to be given or the specific format in which it is to be presented. Characteristic definitions will include, where applicable, the scale and tolerance within which the characteristic is to be stated.

(b) Each requirement will be restricted to a single element of information except in certain instances where it is necessary to combine two or more elements in order to obtain a significant and meaningful response. For example, size and weight, color and material, or voltage rating and wattage rating will constitute two separate requirements in each case. Conversely, measurement values and unit of measure may be combined into a single requirement (e.g; length value and the measurement unit such as inches, feet, meters; electrical resistance value and the measurement unit such as ohms, megohms). Such combinations are referred to as data chains. (see paragraph 3.4.2.g(2))

(c) Each requirement (including the individual portions of data chain requirements) developed in accordance with these procedures is subject to further standardization as a data element or date use identifier. While it is not necessary that an item characteristic requirement as used in a functional application and/or as published in a FIIG conform to the exact format and wording of the applicable resultant data element or data use identifier, it is essential that there be no difference in context (definition). Accordingly, in order to minimize the impact of subsequent revisions, due consideration will be given to the principles of data element and data code standardization in the development of item characteristic requirements.

(2) Requirements Coding

(a) Each different approved requirement will be assigned a four-position Master Requirement Code (MRC) which serves to identify the characteristic defined by the requirement and which may also be used for addressing purposes where required by automated data systems. The MRC is the standard code for use in the interchange of characteristic value data in encoded form. MRCs are assigned on an across-the-board basis (e.g., each unique requirement will be assigned a single code regardless of the number of item commodities or functional areas in which used).

(b) Each approved requirement which is assigned a MRC will also be assigned a one-position alphabetic Mode Code which serves to specify the format in which the characteristic value (reply) data will be prepared for input to automated communications and processing systems. The approved and authorized Mode Codes are listed in appendix 3-4-A .

d. Reply Coding.

(1) Characteristic values (see paragraph 3.4.1.d(4)) will be coded only in those cases where the values applicable to the requirement are qualitative in nature (as opposed to quantitative) and where they can be established as a predetermined set of values. The exception to this is where Federal, DoD or USA Standard codes already exist or are subsequently established for quantitative values. Specifically, the following types of replies will not be coded:

(a) Where the reply value consists of numeric data only (except as noted above).

(b) Designator numbers (e.g., manufacturer's reference numbers, specification numbers, Government type numbers).

(c) Where the reply value is given in terms of a commonly accepted and recognized commercial or Government code or designator which does not require decoding for printout purposes.

(d) Qualitative replies that cannot be predetermined and must be stated in narrative form. (e.g., replies to the "Special Features" requirement in FIIGs).

(2) Where characteristic values qualify for code assignment (see paragraph 3.4.2.d(1)), a table of values (replies) applicable to a given requirement (or to a group of related requirements) will be established, and each value in the table will be assigned a code which is unique within that table. The code may be alphabetic or alphanumeric, but within any given table, the codes will be consistent in length (number of positions) and will consist of the minimum number of characters necessary to accommodate all known and/or anticipated replies to be included in the table. The letters "I" and "O" and all special characters (except the dash) will not be used in the assignment of reply codes. Exceptions to this principle is the case where federal, DoD or USA Standard codes already exist for applicable replies. In this case, the existing codes will be used in lieu of the assignment of additional codes.

e. Secondary Address Coding.

(1) Purpose. Secondary Address Coding provides a means of uniformly extending the Master requirement Code assigned to a specific requirement such that a unique code is provided for each application of the requirement in relation to a given item. The necessity for such modification arises when a characteristic as represented by a specific requirement is inherent in more than one feature (e.g., component, part, section) of an item and the characteristic values must be specified and identified for each different feature. Appendix 3-4-C illustrates a typical application of Secondary Address Coding. See paragraph 3.4.2.g(3) which prescribes the manner for presenting multiple values for the same item or feature of an item.

(2) Secondary Address Indicator Code. The Secondary Address Indicator Code serves to indicate when Secondary Address Coding is used and the number of positions in the Secondary Address Code. The Secondary Address Indicator Code will always be a numeral from 1 to 9.

(3) Secondary Address Code. Where required, Secondary Address Codes will be alphabetic and variable in length (from one-to nine-positions).

f. Identified Secondary Address Coding (I/SAC).

(1) I/SAC is a technique which provides a means to properly identify specific locations, sequences and the like, and relate them to the applicable characteristics for a designated MRC.

(2) Whenever a MRC instructs the use of I/SAC, it must be input at all times even if that reply is relative to only a single location, sequence or the like.

g. File and Record Formats.

(1) MILSTICCS does not prescribe any particular for the construction of characteristic data records or files but rather is intended to serve a variety of data systems design requirements. It provides for the preparation of input to data systems in the form of variable length records. However, the use of variable length records is not mandatory. Likewise, files may be constructed on a characteristic basis where each characteristic is treated as a separate record or on an item basis where all of the characteristics applicable to an item are treated as a single record.

(2) A data chain represents encoded characteristic data in a description of an item. It consists of the MRC, Mode Code and the reply field in coded and/or clear text as designated by the Mode Code. It may include the Identified Secondary Address Coding (ISAC) when more that one location is specified and may include the AND/OR Coding symbols.

(3) The following illustrates the format of a record that depicts a single characteristic and uses all of the features of MILSTICCS.

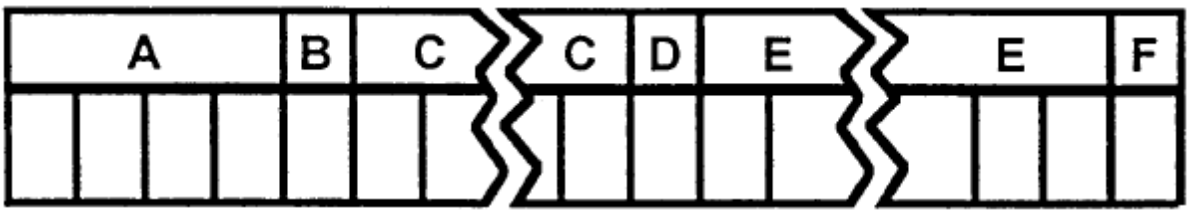

FIELD A Master Requirement Code. See paragraph 3.4.2.c(2)(a) .

FIELD B Secondary Address Indicator Code. See paragraphs 3.4.2.e(1) and 3.4.2.e(2) . (This field will be omitted when Secondary Address Codes are not required.)

FIELD C Secondary Address Code. See paragraphs 3.4.2.e(1) and 3.4.2.e(3) . (This field will be omitted when Secondary Address Codes are not required.)

FIELD D Mode Code. See paragraph 3.4.2.c(1)(b) and appendix 3-4-A .

FIELD E Reply Code or Reply. See paragraph 3.4.2.d .

FIELD F Separator Symbol. The element separator code serves to denote the ending of data applicable to a single characteristic where data for more than one characteristic is included in a transaction record. The cross-hatch symbol (#) is used as this separator.

AND OR

(4) In certain instances, more than one reply value is appropriate to a requirement as it relates to a give item or to a single specific feature (e.g., component, part, section) of an item. (See paragraph 2.5 .) For example, in the case of a requirement calling for the material of which an item is made, the appropriate reply might be wood steel. In another case, the concept of the item is such that the appropriate reply is wood steel. In those cases where multiple values ("AND" condition) or alternate values ("OR" condition) are appropriate, the characteristic record should be constructed as follows:

(a) Master Requirement Code (Field A) followed by the Secondary Address Indicator Code and Secondary Address Code(s) (Fields B and C) if applicable, Mode Code (Field D) and the first reply value code (Field E).

(b) For each succeeding reply value, the appropriate "AND" and/or "OR" symbol (see paragraph 3.4.2.g(4)) followed by the applicable Mode Code (Field D) and the value or value code (Field E).

(c) Separator symbol (Field F).

(5) Except for the first reply value, each individual value in a multivalue characteristic record must be preceded by the appropriate "AND" and/or "OR" symbol and the applicable Mode Code. The symbol for the "OR" condition is a single dollar ($) and the symbol for the "AND" condition is a double dollar ($$).

(a) The AND Coding technique is authorized whenever "multiple replies" are expected as normal replies to a requirement. "Multiple replies" are two (2) or more physical and/or performance characteristics that must be present in the item of supply simultaneously (i.e., all characterisitics represented by the replies are present at the same time).

(b) The OR coding technique is authorized whenever "optional replies" are expected as a normal response to a requirement. "Optional replies" are those item characteristics that are elective (i.e., may be selected singularly but are not required simultaneously). OR coding may be of three types: 1) The item may have one of two (2) or more characteristics present (e.g., handle material of wood or steel); 2) The item may have the capability of operating under different conditions (e.g., current type of alternating or direct); and 3) The characteristics replies may be applied singularly or simultaneously (e.g., obtaining documents from multiple manufacturers at the same time).

(c) The AND/OR Coding technique is authorized whenever "multiple replies", "optional replies" or a combination of both are expected in response to a requirement (i.e., desk material of plastic and wood OR steel and wood).

FIELD A Master Requirement Code

FIELD D Mode Code

FIELD E Reply Code or Reply

FIELD F Separator Symbol

h. Master Requirements Directory

(1) The Commander, Logistics Information Services will maintain the Master Requirements Directory. (See paragraph 3.4.1.d(8))

(2) The publication will be entitled MASTER REQUIREMENTS DIRECTORY and will be assigned an official publication number by each of the Military Services and the Defense Logistics Agency as follows:

Army - AAA NNNN
Navy - AAA NNNN
Air Force - AAA NNNN
Marine Corps - AAA NNNN
Defense Logistics Agency - DLAH 4140.3
GSA - AAA NNNN

(3) The Master Requirements Directory (MRD) is available on cartridge or magnetic tape. Distribution may be requested by calling Logistics Information Services Customer Service Office or email to dlis-cso@dlis.dla.mil. The MRD can also be queried on-line via Logistics On-Line Access by selecting the Characteristic Data Management application which contains the MRD.

3.4.3 Operating Procedures

a. General Principles.

(1) Item characteristic data requirements to be coded in accordance with the provisions of this Chapter will be developed and submitted to Defense Megacenter Columbus. For initial coding purposes, all characteristics applicable to a given commodity area or function will be submitted concurrently. Individual characteristic requirements may be submitted where revision of a FIIG is required.

(2) Except as otherwise specified in this Chapter, the development, coordination and submission of characteristics will be in accordance with the policy, procedures and schedules applicable to the program, project or function for which the characteristics are required.

(3) The exact statement (wording) and format of a requirement as published in a FIIG will conform to the requirements of the applicable program, project or function for which it is developed. The MRD will contain a complete and precise requirement name and definition.

b. Requirements Development Action by the Initiating Activity. In developing item characteristic requirements, each initiating activity will:

(1) Develop proposed requirements in accordance with applicable program/project procedures and the principles contained herein and establish the appropriate Mode Code for each requirement; and in addition, develop a table of authorized replies or other reply restrictions as may be required.

(2) Screen proposed requirements against the MRD. When a proposed requirement matches exactly the title and definition of an existing requirement in the MRD, apply the MRC of the existing requirement to the proposed requirement; and, if applicable, screen proposed table of replies for the matching proposed requirement against the MRD and annotate any proposed replies that have not previously been authorized.

(3) Arrange matching and nonmatching requirements together with proposed reply tables into the format and sequence prescribed by the applicable program or project for which the requirements are being developed and forward to Logistics Information Services. Minimum essential information to be forwarded will include a complete statement of each requirement (including name, definition and instructions for the preparation of replies), the applicable Mode Code, the existing MRC (if any) and, where applicable, a complete table of replies authorized for use in the specific application for which the requirement is intended. The cover letter forwarding FIIG data to Logistics Information Services will identify the FIIG number and the program/project under which developed and will indicate whether for initial review or final review. Where coordination of proposed FIIGs is required by applicable procedures, data will be submitted to Logistics Information Services for initial review prior to or concurrently with the coordination process. Where coordination has been completed, or not required, data will be submitted for final review.

c. Requirements Review by Logistics Information Services. Upon receipt of proposals from initiating activities, the Commander, Logistics Information Services, will:

(1) Review proposed item characteristic requirements for compliance with applicable program/project procedures and the principles contained herein. (As required, make necessary typographical and/or other changes not affecting reuirement statements.) Return to the submitting activity any FIIG that does not conform to the above mentioned procedures/principles, togther with an explanation of deficiencies and recommended modifications. Such recommendations may include, but are not restricted to, restatement, resequencing, consolidation or separation of requirements. If the submitter and Logistics Information Services cannot effect resolution, the Commander, Logistics Information Services, will refer the conflict to HQ DLA, ATTN: DLAH-MMLX and advise the submitting activity of the action taken.

(2) Verify that each proposed requirement representing a previously approved requirement agrees in context with the requirement as stated in the MRD. In addition, determine the acceptability of proposed replies applicable to previously approved requirements and update the appropriate reply table in the MRD.

(3) Screen each proposed new requirement against the MRD in order to ensure uniformity and to avoid duplication. Where the proposed requirement matches exactly to an existing requirement in the MRD, apply the MRC of the existing requirement to the proposed requirement. Where a requirement does not match exactly but is considered to be equal in technical content, the Commander, Logistics Information Services, will take action in accordance with paragraph 3.4.3.c(1) . Where applicable, review proposed replies and, if these proposed replies are acceptable, update the appropriate reply table in the MRD. Where the proposed requirement does not match to an existing requirement, update the MRD to include the proposed requirement and any proposed replies not previously included.

(4) Return to the submitting activity a copy of the tentatively approved requirements.

APPENDIX 3-4-A
MODE CODES

Each approved requirement will be assigned a one-position alphabetic Mode Code. This Code serves to indicate the type and format of reply to be given and thereby signifies the processing required to accomplish the functions of editing, decoding and formatting for printout purposes. (See paragraphs 3.4.1.d(7) and 3.4.2.c(2)(b) .) Only a single Mode Code may be assigned to any given requirement and replies may be given only in accordance with the specified Mode Code except as specifically authorized by Mode Codes E and K. An explanation of authorized Mode Codes is contained in the following paragraphs. The examples given are for purposes of illustration only and are not intended to represent actual examples of requirements or replies.

MODE CODE A:

The reply value is given in clear text and may consist of any combination of words, numerals and/or symbols. However, the use of numeric values with this Mode Code is restricted to those values that are always expressed as whole numbers and which do not represent a unit of measure on any measurement scale.

CODED CHARACTERISTICS	DECODED CHARACTERISTICS	
AAJDA2B	THREAD CLASS	2B
AFQWA2	MATING END QUANTITY	2
PRPYAPACS	PROPRIETARY CHARACTERISTICS	ALL PACS

MODE CODE B:

The reply value is given in clear text decimal form with a minimum of one digit preceding and succeeding the decimal (e.g., 0.1, 1.0). Nonsignificant digits other than as required to meet this minimum requirement will be omitted. Negative values will be preceded by the letter “M” (represents “minus” which will decode as “-”). All values not preceded by an “M” will be assumed to represent positive values. This Mode Code will be used with all replies representing numeric values on measurement scales such as dimensions, electrical ratings or weights. Decoding of the reply is not required (except as necessary to designate negative values).

CODED CHARACTERISTICS	DECODED CHARACTERISTICS	
AJFYB45.0	SEAT ANGLE IN DEG	45.0
ATPRB5000.0	MAXIMUM SPEED RATING IN RPM	5000.0
AAQGBM10.0	AMBIENT TEMP IN DEG CELSIUS AT ZERO PERCENT RATED POWER	-10.0

MODE CODE C: (NOTE: This Mode Code is not currently available.)

Mode Code C is used in exactly the same manner as Mode Code B except when decoded the decimal values will be in fractional form.

CODED CHARACTERISTICS	DECODED CHARACTERISTICS	
XXXXC6.5	SIZE	6-1/2

MODE CODE D:

This Mode Code uses a coded reply value. The reply codes normally represent qualitative values but may, in certain instances, represent quantitative values. (See paragraph 3.4.2.d)

CODED CHARACTERISTICS	DECODED CHARACTERISTICS	
CWJKDPCA000	CASE MATERIAL	PLASTIC
ADQBDAD$$DAJ	SECURING DEVICE TYPE	HINGE AND THREADED FASTENER
MATT1XDCU0000	MATERIAL	COPPER ALLOY OVERALL

MODE CODE E:

This Mode Code will never be assigned to a requirement. It is used in lieu of the Mode Code assigned to a requirement to signify that the reply represents a specific value as called for by the requirement, but the reply is not one of the authorized values established for the requirement. (Also see Mode Code K.) It may be used in lieu of any assigned Mode Code, except Mode Code G, under the following conditions:

a. It may be used in those instances where the requirement specifies, through an authorized table of replies or other limitations, the replies that are normally acceptable and the appropriate reply is not among those specified. In this sense, Mode Code E represents an exception reply condition.

b. Mode Code E replies must be in context with the requirement with which it is used. For example, if a normally acceptable reply was not provided in the reply table for a requirement calling for surface treatment, the reply will be given in full text. Additional data such as surface thickness or color is not a valid response to this requirement.

c. Mode Code E replies must always be given totally in clear text.

d. Mode Code E replies must be structured in the same manner as the replies authorized for use with the requirement.

CODED CHARACTERISTICS	DECODED CHARACTERISTICS	
AMSPEFIBERGLASS	BASIC MATERIAL	FIBERGLASS

MODE CODE F:

This Code is similar to Mode Code B except that the reply value will consist of a range of values for a given characteristic. All values will be given in decimal form and will be separated by a slash mark (/). Each value will be preceded by an “M” or “P” denoting negative and positive values, respectively. A zero value will always be preceded by “P”. Values will be given in a algebraic sequence.

CODED CHARACTERISTICS	DECODED CHARACTERISTICS	
AFGAFCM65.0/P125.0	OPERATING TEMP RANGE	-65.0 TO 125.0 DEG CELSIUS
BNFJFP250.0/P1000.0	SPEED CONTROL RANGE IN RPM	250.0 TO 1000.0

MODE CODE G:

The complete reply, consisting of any combination of words, numerals and/or symbols is given in clear text. This Code is used where the requirement cannot be predetermined. An example of this type of requirement is the “Special Features” requirement contained in FIIGs. Replies given with this Mode Code do not require decoding.

CODED CHARACTERISTICS	DECODED CHARACTERISTICS	
AGAVGAIRCRAFT MODEL C-119	END ITEM IDENTIFICATION	AIRCRAFT MODEL C-119

MODE CODE H:

The reply is coded and consists of two or more individual reply values, each of which contains a fixed number of characters and is positioned at a specific location in the transaction. Each individual value is the equivalent of a reply conforming to Mode Code D.

CODED CHARACTERISTICS	DECODED CHARACTERISTICS	
MTLC1BHAADPC0010	MATERIAL AND LOCATION	FIRST END PLASTIC, EPOXY, MIL-P-18177, TYPE GEB OVERALL
CQWYHAFCXAF	SPECIES-GRADE AND GRADING ASSOCIATION	OAK C FLOORING NATIONAL OAK FLOORING MANUFACTURERS ASSOCIATION

MODE CODE J:

The reply is coded and consists of one or more individual reply values, each of which contains a fixed number of characters and is positioned at a specific location in the transaction, followed by additional value reply which has a variable number of characters. Each individual value is the equivalent of a reply conforming to Mode Code D. The variable length value is the equivalent of a reply conforming to Mode Codes A, B, C or F.

CODED CHARACTERISTICS	DECODED CHARACTERISTICS	
MDCL1JJCA66$$J GAAISI/SAF 1141	MATERIAL DOCUMENT AND CLASSIFICATION	66 FED STD SINGLE MATERIAL RESPONSE AND AISI/SAF 1141 ASSN STD SINGLE MATERIAL RESPONSE OVERALL
ABKVJAA3.750	OUTSIDE DIAMETER	3.750 INCHES NOMINAL
AAJEJAP0.708/P0.712	THREAD PITCH DIAMETERS	0.708 TO 0.712 INCHES
CQFBJCCNM25.0/P15.0	VOLTAGE TEMP LIMITS PER SECTION IN PERCENT CAPACITANCE CHANGE	-25.0 TO 15.0 WITH RATED VOLTAGE APPLIED SINGLE SECTION
BCLFJA14.0/17.0	MAXIMUM FILM SIZE ACCOMMODATED	14.0 BY 17.0 INCHES

MODE CODE K:

This Mode Code will never be assigned to a requirement. It may be used in lieu of the Mode Code assigned to a requirement to signify that the reply does not represent a specific value as called for by the requirement. (Also see Mode Code E.) It may be used in lieu of any assigned Mode Code, except Mode Code D or G but only in association with one of the authorized standard reply phrases listed below. Accordingly, it may be used only in those instances where a specific value reply cannot be given because of a condition as indicated by the authorized standard reply phrases.

STANDARD REPLY PHRASES

REPLY CODE		REPLY
A	ANY ACCEPTABLE	(The citation of a specific value (reply) in relation to the characteristic called for by a requirement is not required forE item identification purposes. Any applicable value is acceptable.)
N	NOT RATED	(The specific value (rating) of the characteristic called for by a requirement has not been determined for the item being identified.)
X	NOT APPLICABLE	(The characteristic called for by the requirement does not apply to the item being identified.)

CODED CHARACTERISTICS	DECODED CHARACTERISTICS	
AASAKA	THREAD LENGTH	ANY ACCEPTABLE
AZKQKN	TEMP RATING	NOT RATED

MODE CODE L:

Mode Code L is similar to Mode Code D in that the reply which may consist of any combination of letters or numerals symbolizes a concept, image or idea. However, it differs from Mode Code D in that a given set of letters or numerals (the reply) may represent different concepts, images or ideas depending on the context (FIIG/commodity area) with which it is used. For example, the reply “3A6” given in response to the requirement Head Style in a FIIG pertaining to threaded fasteners might represent a Pan Head style. The same reply given in response to the same requirement in a FIIG pertaining to keys, pins and studs might represent an Oval Head Style. This Mode Code is used in lieu of Mode Code A in those cases where, for decoding purposes, it is necessary to indicate both the reply symbol and the name or title of the specific concept that it represents.

CODED CHARACTERISTICS	DECODED CHARACTERISTICS	
AAQLL27A	BODY STYLE	27A W/O MTG FACILITIES TERMINAL(S) ON ONE SURFACE
STYLLD5	STYLE DESIGNATOR	D5 THREADED TYPE-INTERNAL

APPENDIX 3-4-B
MASTER REQUIREMENTS DIRECTORY

SECTION I AND VII Master Requirement Codes

This section contains each MRC with its respective Mode Code, MRC usage designator, MRD status code, print skeleton code, keyword group code, keyword modifier statement, requirement statement, requirement statement, requirement statement definition, MILSTICCS instructions, assigned reply table and length of the coded replies, if applicable, utilized by the requirement.

SECTION III Reply Tables

This Section contains the reply tables, the assigned reply code and the respective decoded reply statement.

SECTION V Style Reply Tables

This Section contains the style number and decoded style reply statement for each Mode Code L MRC.

SECTION VI, PART I Identified Secondary Address Code Reply Tables

This Section contains the ISAC reply tables for each FIIG and MRC utilizing ISAC coding.

SECTION VI, PART II Identified Secondary Address Code Replies

This Section contains the decoded ISAC reply statement for each ISAC reply table and ISAC coded reply.

APPENDIX 3-4-C
SECONDARY ADDRESS CODING

As indicated in the Purpose and Scope (see paragraph 3.4.1.c), this chapter does not include procedures for the application of assigned codes in the execution of functional processes. This Appendix, while it does illustrate an application of Secondary Address Codes, it is not intended to prescribe procedures but rather to serve as an aid in the understanding of the Secondary Address Coding technique and as guidance in the development of FIIGs. MILSTICCS is based on the principle that each different characteristic will be assigned a MRC which serves to identify the characteristic and which may also be used as an address code for communications and automated processing purposes. Since the characteristics applicable to an item are specified by requirements in a FIIG, the identification and addressing codes are assigned to requirements.

Where a characteristic is applicable to more than one feature (component, part, section) of an item (e.g., the characteristic resistance in the case of a multisection resistor), the basic characteristic must be treated and identified as a different characteristic each time it applies to a different feature of the same item in order to relate the characteristic values to specific features. This implies that a FIIG must include a separate requirement for each application of a characteristic to each possible component, part, section, of the item covered by the FIIG. Since this is not practical, MILSTICCS facilitates FIIG development by providing for the inclusion in the FIIG of a requirement for the basic characteristic only and the identification of this requirement by a single code. This basic code can be extended so as to provide a different identification to each application of the requirement to features of the item. This technique, called Secondary Address Coding, not only provides for the identification and differentiation of each characteristic value, but provides a means whereby the characteristic values of various features can be related, one with the other, as necessary for a proper and adequate description of an item.

For further clarification, consider an item (resistor) that has three sections each of which is rated at a total resistance value. In addition, each section has terminal taps that divide the sections into several segments, each of which have different resistance ratings. The tap terminals are of a different material and type for each segment. In this instance, it is necessary to relate the total resistance value of each section to a specific section (first level). The resistance value of each segment must be related to s specific segment and also to a specific section (second level). The material of each tap must be related to a specific type of tap, which in turn is associated with a specific segment and section (third level). The Secondary Address Coding technique of MILSTICCS provides for this type of relationship by successively adding an additional character to the basic address code for each level of association. It provides for any number of levels, up to nine. However, careful arrangement of the FIIG may eliminate the necessity for excessive levels of relationship.

Figure 2 illustrates the application of Secondary Address Codes in the case of a three-section resistor using the same FIIG shown in Figure 1. In this example, the first, second, and third sections are related at 4.2, 10 and 1,000 kilohms resistance, respectively. The first section is untapped, the second section is tapped at 4 kilohms

and the third section is tapped at 250 and 500 kilohms. In the interest of simplicity, all tolerances are considered to be plus or minus 1 percent.

FIGURE 1

FEDERAL ITEM IDENTIFCATION GUIDE

MRD	MODE CODE	REQUIREMENT
AAPN	**A**	**SECTION QUANITY** Definition: The number of individual elements. Reply Instructions: Enter the quanity. (e.g., AAPNA3*)
AAPP	**J**	**ELECTRICAL RESISTANCE** Definition: A measure of the opposition to the flow of electrical current. Reply instructions: Enter the applicable reply code from the table below, followed by the numeric value. (e.g., AAPP1AJK4.2*; AAPP1BJK10.0*; AAPPICJM1.0*)

REPLY CODE	REPLY (AA57)
G	GIGOHMS
K	KILOHMS
M	MEGOHMS
Q	OHMS

AAPQ	**F**	**RESISTANCE TOLERANCE IN PERCENT** Definition: The limits of permissible variation in the electrical resistance value of an item from its rated value, expressed in percent. Reply Instructions: Enter the numeric value. (e.g., AAPQ1AFM1.0/1.0*; AAPQ1BFM1.0/1.0*; AAPQ1CFM1.0/1.0*)
AAPR	**A**	**FIXED TAP QUANITY** Definition: The number of fixed terminals at points between the end terminals that provide connection to intermediate values of the total value. Reply instructions: Enter the quantity. (e.g., AAPR1AA1*; AAPR1BA1*); AAPR1CA2*)
AAPT	**J**	**SEGMENT RESISTANCE** Definition: The opposition of the flow of electric current through each segment. Reply Instructions: Enter the applicable reply code from the table below, followed by the numeric value. (e.g., AAPT2BAJK4.0*; AAPT2BBJK6.0*; AAPT2CAJK250.0*; AAPT2CBJK500.0*; AAPT2CCJK250.0*)

REPLY CODE	REPLY (AA57)
G	GIGOHMS
K	KILOHMS
M	MEGOHMS

MRD	MODE CODE	REQUIREMENT
Q		OHMS

FIGURE 2

CODED CHARACTERISTICS

MRC	SAC/ISAC	MODE	CODED REPLY VALUE
AAPN		A	3
AAPP	1A	J	K4.2
AAPP	1B	J	K10.0
AAPP	1C	J	M1.0
AAPQ	1A	F	M1.0/1.0
AAPQ	1B	F	M1.0/1.0
AAPQ	1C	F	M1.0/1.0
AAPR	1A	A	1
AAPR	1B	A	1
AAPR	1C	A	2
AAPT	2BA	J	K4.0
AAPT	2BB	J	K6.0
AAPT	2CA	J	K250.0
AAPT	2CB	J	K500.0
AAPT	2CC	J	K250.0

DECODED CHARACTERISTICS

MRC	REQUIREMENT STATEMENT	CLEAR TEXT REPLY
AAPN	SECTION QUANTITY	3
AAPP	ELECTRICAL RESISTANCE	4.2 KILOHMS 1ST SECTION
		10 KILOHMS 2ND SECT
		1 MEGOHM 3RD SECTION
AAPQ	RESITANCE TOLERANCE IN PERCENT	-1.0 TO 1.0 1ST SECTION
		-1.0 TO 1.0 2ND SECTION
		-1.0 TO 1.0 3RD SECTION
AAPR	FIXED TAP QUANTITY	1 1ST SECTION
		1 2ND SECTION
		2 3RD SECTION
AAPT	SEGMENT RESISTANCE	4 KILOHMS 1ST SEGMENT 2ND SECTION
		6 KILOHMS 2ND SEGMENT 2ND SECTION
		250 KILOHMS 1ST SEGMENT 3RD SECTION
		500 KILOHMS 2ND SEGMENT 3RD SECTION
		250 KILOHMS 3RD SEGMENT 3RD SECTION

CHAPTER 5
THE FEDERAL SUPPLY CLASSIFICATION SYSTEM

3.5.1 Purpose

This chapter will describe the structure and organization of the Federal Supply Classification System and the procedures for its modification.

3.5.2 Use

The Federal Supply Classification System is sufficiently comprehensive to permit the classification of all items used by participating activities. A Federal Supply Class (FSC) is selected for every item of supply and forms the first four digits of the National Stock Number (NSN). This system, with its structure of groups and classes, represents those groupings and relationships which are based on current as well as anticipated management needs. As these needs change, the structure is modified by the addition of newly developed groups and classes, the subdivision of existing classes, and the revision of definitions for classes.

3.5.3 Structure

The Federal Supply Classification System is composed of commodity classes organized within broad groups. The system permits a total of 99 Federal Supply Groups (FSGs), each of which may be subdivided in 99 Federal Supply Classes (FSCs). The classes within any group are considered to be closely related. Each class covers a relatively homogenous area of commodities with respect to their physical or performance characteristics, their relationship to a next higher assembly, or because they are usually procured or issued together.

a. Code Numbering system. Each class of items is assigned a four digit code. The first two digits represent the FSG and the last two digits specify the class within each group.

b. Expansion of the present number of groups and classes has been provided for by the gaps in sequence left between the code numbers assigned to groups and within groups to adjacent classes. Such expansions may be required by technological advances or by the need for other desirable additions and changes.

c. Whether a class includes the phrase “and components” as part of the class title or not, assemblies, subassemblies, and component parts specially designed for items in the class will be included only where no class exists within the FSC structure for that type of component.

Example 1. FSCs 4810 and 4820 are established for powered and nonpowered valves. Valves of the same type as established in Federal Supply Group will be classified within these classes regardless of a “NOTE” including component parts in the next higher assembly class.

Example 2. Group 25 Vehicular Equipment Components was established for items which otherwise might have been classified in Group 23, Ground Effect Vehicles, Trailer and Cycles and Group 24, Tractors.

d. Condition Codes. A single digit indicating the type of FSC classification for an item in the Alphabetic and Numeric Indexes of the Cataloging Handbook H6.

(1) Condition Code (1). The Approved Item Name (AIN) which may be classified in one and only one specific class of the FSC structure.

(2) Condition Code (2). The AIN which may be classified in two or more specific classes of the FSC structure, as specifically indicated.

(3) Condition Code (3). Not authorized for use.

e. Explanation of Condition Code (2). The Condition Code is included with the AINs in the Cataloging Handbook H6. Those AINs with Condition Code 2 specifically are entered in the Cataloging Handbook H6 with the FSC and the class modifier which applies. Example of proper application of condition codes are as follows:

Example 1. The AIN "TAPE, SOUND, RECORDING" is classified only in Federal Supply Classes 5835 and 7450. The two specific H6 entries for this AIN both include Condition Code (2) following the class modifiers ("except office type" for FSC 5835, and "office type" for FSC 7450). However, the mandatory classification for each category of sound-recording tape is indicated in the "Class" column on the right-hand side of that particular entry in the Handbook. That is, office-type recording tape is classified in FSC 7450, and all other types (applications) are classified without exception on FSC 5835.

Example 2. The AINs "CIRCUIT BREAKER" and "CIRCUIT BREAKER SUBASSEMBLY" are properly assigned to two different classes based on the voltage and type of current of the item being classified. This is indicated in the H-6 by a series of four entries derived from each AIN, such as "Circuit breakers, above 250 volts DC(2)---6110" and "Circuit breaker subassemblies, 250 volts DC and below (2)---5925". Condition Code (2) does not imply that a given item with the voltage and current shown can be classified in two classes. The modifying phrase in each case governs the classification and restricts the item of supply to one specific class.

3.5.4 General Principals and Rules

a. Unique Classification of Each Item of Supply. Each Item of Supply shall be classified in one, and only one, 4 digit FSC. The assignment of an FSC code number to an item of supply shall not be influenced by the method and type of item identification used to establish the concept of the item.

b. Classification of Parts Where a Specific Class Exists. Where a specific FSC is applicable to a particular part, that part shall be classified in the specific class and not with its next higher assembly, except as indicated below:

(1) A "Specially Designed Item" shall be classified with its next higher assembly in the class established for the higher assembly when, and only when, the FSC requires such classification. The term "higher assembly" is used for brevity of "next higher classifiable assembly" and is understood to mean the next higher assembly on or with which the item is used as a subassembly, part, attachment or accessory. In order to be accepted as specifically designed, an item does not have to be designed specifically for use in a single piece or single model

of equipment. The item may be designed for use with catagories of equipment such as all kinds of printing presses or all kinds of diesel engines. The requirement that a “specifically designed item” be classified with the equipment for which it is specially designed is indicated in the FSC by:

(a) A Note. A note at the head of the class or group in Cataloging Handbook H2 directing that “specially designed item” are to be classified with their next higher assemblies. The term “specially designed item” is an abbreviation of the term “specifically designed for specific use on or with specific individual types of equipment” as used in the notes in the Cataloging Handbook H2.

(b) A Modifier. The modifier “multiapplication” added to the name indexed in Cataloging Handbook H6, indicating that the specially designed items are to be classified with their next higher assemblies.

(c) An Exclusion. An exclusion to the class published in Cataloging Handbook H2 indicating that the item is not to be classified therein.

(d) An Exception. A term of exception applied to an entry in Cataloging Handbook H6 excluding the item.

(2) When an item of supply has been classified as a “specially designed item” with its next higher classifiable assembly, the FSC class code number originally assigned shall not be changed to that of a multiapplication class until evidence becomes available that the item does have multiple applications.

c. Classification of Parts Where No Specific Class Exists. Where no specific FSC is applicable to a particular part, that part shall be classified with its next higher classifiable assembly in the class established therefor.

d. Classification of Parts Having Multiple Applications. The FSC for an item which is to be classified with its next higher assembly but which is used on or with different assemblies classified in two or more classes of the FSC, shall be assigned in accordance with the following:

(1) When a variety of applications to assemblies classified in different classes is known to exist at the time the subassembly, part, attachment or accessory is initially classified, the FSC code number assigned shall be that which will be most useful in supply management, selected on the basis of:

(a) The most significant application of the item.

(b) The code number least likely to be obsoleted.

(c) The greatest number of application of the item.

(2) When a code number is assigned to a multiple application item after a consideration of the known applications and the application(s) within the class assigned become obsolete, a new class code number shall be selected in accordance with paragraph 3.5.4.d(1) .

(3) When a subassembly, part, attachment or accessory is assigned an FSC on the basis of its relationship to a higher assembly, and it is later discovered that the item is used on additional assemblies which are not in

the same class as the assembly initially considered, the FSC originally assigned shall be used for all other applications of the item.

e. Auxiliary Subdivisions of Federal Supply Classification Classes. Where greater commodity classification detail is required by a participating service or activity than is provided for in the basic 4-digit FSC structure, auxiliary subdivisions of classes (commonly referred to as “Auxiliary Classifications;” or “Subclasses”) may become necessary. These auxiliary subdivisions of classes may be developed by the participants for their own use. If a universal requirement is found to exist for a particular auxiliary subdivision, consideration will be given to the establishment of additional FSC classes corresponding to the auxiliary subdivision. When used in conjunction with the NSN, any auxiliary subdivision of a class found necessary by a participant shall be signified by augmentation of the NSN and not by change to the 4-digit FSC. In no event shall any of the 13 digits of the NSN be changed or digits or other symbols be inserted within the 13-digit structure.

f. Classification of Sets, Kits, and Outfits. The following rules shall govern the classification of Sets, Kits, and Outfits:

(1) Sets, Kits, and Outfits consisting of variations (such as size or color) of an item shall be classified in the same class as the individual items.

(2) Sets, Kits, and Outfits consisting of several different items classifiable either in a single class or in several classes of the same group, or in classes of more than one group, shall be classified in the “Sets, Kits, and Outfits” class of the group which logically covers the application or functions purpose for which the set, kit, or outfit was assembled.

(3) If no “Sets, Kits, or Outfits” class is established in the appropriate group which covers the application or functional purpose of the set, kit, or outfit, then the set, kit or outfit shall be classified in the single class of the appropriate group which logically covers the application or functional purpose for which the set, kit, or outfit was assembled.

(4) If the appropriate 4-digit FSC cannot be determined by application of the above rules, the set, kit or outfit shall be assigned to the class which is considered most useful for supply management.

(5) If no class is found to be appropriate under any of the above rules, the set, kit, or outfit shall be classified in FSC Class 9999, Miscellaneous Items.

3.5.5 Publications

The following handbooks assist users in establishing the appropriate FSC for each item of supply and help minimize inconsistency in the classification of identical items.

a. Cataloging Handbook H2, Federal Supply Classification, is organized by groups and classes, and presents the classification structure, showing all the groups and classes listed in the arrangement of the four digit FSC coding numbering system. Where appropriate, the main commodities included (or excluded) which delimit the

coverage of a particular class are shown below the title for the class. In addition, specific notes may be inserted following specific group and class titles which define or delimit the coverage of a particular group or class.

b. Cataloging Handbook H6, Federal Item Name Directory for Supply Cataloging, includes a reference to the FSC and applicable Condition Code for each Approved Item Name.

3.5.6 Maintenance of the Federal Supply Classification System

a. Proposals for Revision to the FSC Structure.

(1) Revisions to the FSC structure are those changes which constitute a significant revision to any of the present groups or classes, such as:

(a) The establishment of a new group or class.

(b) The deletion of an existing group or class.

(c) A revision to the delimitations of an existing group or class which results in a broader or narrower scope.

(d) A revision in a principle or rule for classification.

(2) Submission of Proposals. When applicable, proposals should include corresponding DD Form 180/AC135s showing modification to existing item names, and/or any new names which will be developed as a result of the changes.

(a) Submitters.

(1.) Participating Military Service activities and Defense Supply Centers submit proposals through their Cataloging Activity to the appropriate Headquarters Catalog Office (HCO).

(2.) Participating Civil Agencies other than the Veterans Administration submit proposals to the Federal Supply Service, General Services Administration (GSA).

(3.) The Veterans Administration submits proposals directly to the Logistics Data Production Support Branch, Logistics Information Services-KPN.

(4.) All other activities submit proposals directly to the Logistics Data Production Support Branch, Logistics Information Services-KPN.

(b) Headquarters Catalog Office/Federal Supply Service, GSA:

(1.) Reviews proposals submitted by Military Service activities or Defense Supply Centers/Civil Agencies, conducts internal coordination, and develops unified proposals.

(2.) Submits unified proposals to the Logistics Data Production Support Branch, Logistics Information Services-DPN.

(3) Processing of Proposals.

(a) Responsibilities of the Logistics Data Production Support Branch, Logistics Information Services-KPN.

(1.) Reviews proposals for compliance with DoD policies and procedures within 30 days and forwards, by fax or e-mail, with comments as necessary to the following Headquarters Catalog Offices (except for the submitter of proposal) for concurrence and/or comments:

Army
Navy
Air Force
Marine Corps
General Services Administration
Veterans Administration
Defense Threat Reduction Agency
National Security Agency
Federal Aviation Agency
Coast Guard

(2.) Forwards proposals to NATO for simultaneous coordination with U.S. activities. NATO will have 30 days to reply.

(3.) Reviews comments on the proposals received from the Headquarters Catalog Offices and/or the Federal Supply Service and NATO. If a reply is not received, no interest in the proposal will be assumed.

(4.) If a counterproposal is received, the coordination process will start over with a copy going to the submitting activity.

(5.) When a nonconcurrence is received, Logistics Information Services-KPN:

(6.) Notifies Headquarters Catalog Offices, Veteran Administration, the Federal Supply Service, GSA, and NATO of approved new FSCs or revisions by Federal Supply Classification Structure Changes (Distribution C/F) letters. The Distribution C/F letters will be effective dated six months prior to changes.

(7.) Incorporates the approved new FSCs or revisions into the Cataloging Handbooks H2-1 and H6.

(b) Responsibilities of the Headquarters Catalog Office:

(1.) Performs technical review of proposals forwarded by the Logistics Data Production Support Branch, Logistics Information Services-KPN, and contacts Military Service activities and Defense Supply Centers, as necessary.

(2.) Forwards concurrence and/or comments on proposals to the Logistics Data Production Support Branch, Logistics Information Services-KPN, within 30 days.

(3.) Informs Military Service activities and Defense Supply Centers, as necessary, after Logistics Information Services-KPN approval.

(c) Responsibilities of the Federal Supply Service, GSA:

(1.) Performs technical review of proposals forwarded by the Logistics Data Production Support Branch, Logistics Information Services-KPN, contacting Civil Agencies, as necessary.

(2.) Forwards concurrence and/or comments on proposals to the Logistics Data Production Support Branch, Logistics Information Services-KPN within 30 days.

(3.) Informs Civil Agencies, as necessary, after Logistics Information Services-KPN approval.

(d) Responsibilities of the Veterans Administration:

(1.) Performs technical review of proposals forwarded by the Logistics Data Production Support Branch, Logistics Information Services-KPN.

(2.) Forwards concurrence and/or comments on proposals to the Logistics Data Production Support Branch, Logistics Information Services-KPN within 30 days.

b. Proposals for Revision to the FSC Indices.

(1) Revisions to the FSC indexes are those changes which affect the individual classification of specific items of supply. (See volume 4, chapter 4.2). These revisions are brought about by conditions such as:

(a) The addition of a new item name.

(b) A revised interpretation of an existing item name.

(c) A revision of an item name which substantially changes the concept of the item.

(d) A revision of the definition of an item name which substantially changes the concept of the item.

(e) A new design for an item of supply.

(f) A determination of the desirability of a revised classification for an item of supply, within the delimitations of the present FSC structure.

(g) Improper initial classification of an item name.

(h) Change to a condition code.

(2) Submission of Proposals. All proposals for revision to the FSC indexes (except those associated with a proposed revision to the FSC structure) are submitted to the Logistics Data Production Support Branch, Logistics Information Services-KPN. (See appendix 3-5-A thru C.) The submissions will contain the following information:

(a) Specific revision, reclassification, and/or addition requested.

(b) Justification for the action proposed.

(c) National Stock Numbers, if available, for items for which the proposed action is sought.

(3Processing of Proposals.

(a) Logistics Data Production Support Branch, Logistics Information Services-KPN, reviews proposals within five working days and:

(1.) Accepts those which are adequately justified as to the need and desirability for the proposed actions.

(2.) Returns those which require a structure change to the FSC or are incompatible with the FSC system as established.

(3.) Collaborates change of an Approved Item Name from one FSC to another with interested activities as shown by the Major Organizational Entity (MOE) Rules on NSNs presently in the FLIS database for this item name.

(4.) After approval and prior to implementation, ensures that necessary coordination has been accomplished between gaining and losing activities when the change includes a transfer of item management responsibility. (See volume 13 for FSC, MOE Rules, and Management Exception Rule Notes as applicable.)

(5.) Incorporates accepted revisions, reclassifications, and/or additions in supplements to the FSC indexes.

(6.) Notifies the submitter of the approval or rejection of the proposal. Notification of rejection will include the reasons for disapproval.

(b) Submitters may resubmit a rejected proposal in accordance with paragraph 3.5.6.a above, if the proposal was returned because a change to the FSC Structure was involved.

3.5.7 International Use of the Federal Supply Classification System

a. NATO Use. In February 1956, the Air Board, Military Agency for Standardization, NATO, convened a Working Party in London which prepared and recommended the adoption of the second draft standardization agreement STANAG 3150. This agreement provided for the adoption of the United States Federal Supply Classification system as the NATO Supply Classification System, with the United States having responsibility for maintenance of the system, including right of decision on all matters pertaining thereto. This agreement was subsequently ratified by fourteen NATO members, including the United States.

b. Revision to the Classification Structure Under STANAG 3150.

(1) Revisions Proposed by the United States. Revisions to the classification structure which are proposed by the United States shall be forwarded to the NATO member nations prior to approval. A period of 30 days is provided for concurrence and/or comment by individual NATO countries. Upon completion of this coordination, the following actions shall be taken, as appropriate.

(a) The United States (DLA/Logistic Information Services) approves the revision, specifying the implementation dates, if complete or majority concurrences are received.

(b) The United States considers and incorporates, if acceptable, modifications to proposed revisions, as submitted by the NATO countries.

(c) The United States resolves any conflicts of opinion if a majority of nonconcurrences, or major proposals for modifications of proposed revisions, are submitted by the NATO countries.

NOTE: Revisions which are proposed by a NATO member nation other than the United States are decided by the United States within a 30-day period, following the 30-day period provided for NATO concurrence actions. Notice of the final disposition of all proposed revisions to the classification system is forwarded by the United States to all NATO countries, stating, as appropriate, the reasons for nonacceptance of comments.

(2) Revisions Proposed by NATO Member Nations. Revisions to the classification structure proposed by any one of the NATO member nations, are forwarded to all signatories of STANAG 3150 by the originating country. Concurrence and/or comment is forwarded by other signatories to the originating country and to the United States within a period of 30 days. Approved revisions are implemented on the effective date specified in the notification of approval forwarded to all signatories by the United States.

APPENDIX 3-5-A
SAMPLE OF FSC CHANGE

PART "A" RUBRIQUE "A"	ITEM NAME COLLABORATION ACTION REQUEST DEMANDE CONCERNANT LES DENOMINATIONS D'ARTICLE		
DATE JAN 18, 2000	REFERENCE XX (Activity Code)	FIIG/IIG *GIA* T266	
Item Names, Basic Names, Definitions, Index Entries and Justification Denominations d'articles, denominations de base, definitions, justifications.	INC *Codes denominations*	Appl Key *Code d' applicabilite*	NSC *CLASSE*
ADD FSC:			
MIRROR, GLASS	08275	LA	
furniture			7105 (2)
glass, fabricated materials			9340 (2)
DELETE FSC:			
communications			5895 (2)
JUSTIFICATION:			
The uses of other AINs would adequately describe items used for communication.			
P.O.C. - NAME OF SUBMITTER AND PHONE #:			
Above proposed cataloging action will/will not require changes to existing item characteristic data of FIIGs as indicated. *Les propositions ci-dessus entrainent/n'entrainent pas de modifications aux donnees d'identification existantes de l'article telles qu'elles sont prevues dans le GIA.*			
NATO Form AC-135 No. 28A *Imprime modele OTAN AC/135 No. 28A*	Page 1 of 1 Pages		

DD FORM 180, OCT 87 (EG) PREVIOUS EDITIONS ARE OBSOLETE. PerForm (DLA)

APPENDIX 3-5-B
SAMPLE OF FSC CHANGE

PART "A" RUBRIQUE "A"	ITEM NAME COLLABORATION ACTION REQUEST DEMANDE CONCERNANT LES DENOMINATIONS D'ARTICLE		
DATE JAN 18, 2000	REFERENCE XX (Activity Code)	FIIG/IIG *GIA* A238	
Item Names, Basic Names, Definitions, Index Entries and Justification Denominations d'articles, denominations de base, definitions, justifications.	INC *Codes denominations*	Appl Key *Code d' applicabilite*	NSC *CLASSE*
ADD FSC/CHANGE CONDITION CODE:			
MULTIPLEXER-POWER SUPPLY GROUP	00558		5895 (1)
A collection of items that provide multiplexing and power supply facilities.			
DELETE FSCs:			
MULTIPLEXER-POWER SUPPLY GROUP	00558		
radio and television communication equipment except airborne			5820 (2)
telephone and telegraph			5805 (2)
teletype and facsimile			5815 (2)
special design			5811 (2)
fiber optic			6008 (2)
JUSTIFICATION:			
The above item name condition code changes will assist in classifying this item of supply with homogenous items, and is included in the H-2 and mid-long term goals.			
P.O.C. - NAME OF SUBMITTER AND PHONE #:			
Above proposed cataloging action will/will not require changes to existing item characteristic data of FIIGs as indicated. *Les propositions ci-dessus entrainent/n'entrainent pas de modifications aux donnees d'identification existantes de l'article telles qu'elles sont prevues dans le GIA.*			
NATO Form AC-135 No. 28A *Imprime modele OTAN AC135 No. 28A*	Page 1 of 1 Pages		

DD FORM 180, OCT 87 (EG) PREVIOUS EDITIONS ARE OBSOLETE. PerForm (DLA)

APPENDIX 3-5-C
Sample of FSC Change

PART "A" RUBRIQUE "A"	ITEM NAME COLLABORATION ACTION REQUEST DEMANDE CONCERNANT LES DENOMINATIONS D'ARTICLE		
DATE JAN 18, 2000	REFERENCE V.4.3 - Az 80.03.23/07398	FIIG/IIG *GIA*	
Item Names, Basic Names, Definitions, Index Entries and Justification Denominations d'articles, denominations de base, definitions, justifications.	INC *Codes denominations*	Appl Key *Code d' applicabilite*	NSC *CLASSE*
ADD: Approved Item Name			
UNDERWATER GUIDED MUNITION, MINE DISPOSAL			1352
Ammunition with self-propulsion, destruction charge, location and reconnaissance equipment. It is fired, guided to the target and detonated from a vessel. The ammunition is used for underwater mine hunting, reconnaissance and disposal.			
ADD: Approved Item Name			
UNDERWATER GUIDED MUNITION, MINE RECONNAISSANCE			1352
A version of the UNDERWATER GUIDED MUNITION, MINE DISPOSAL without destruction charge. It is designed to be used for underwater mine hunting and reconnaissance and may also be used for training purposes.			
JUSTIFICATION:			
LogABw needs the AIN for the processing of submitted codification requests.			
P.O.C. - NAME OF SUBMITTER AND PHONE #:			
Above proposed cataloging action will/will not require changes to existing item characteristic data of FIIGs as indicated. *Les propositions ci-dessus entrainent/n'entrainent pas de modifications aux donnees d'identification existantes de l'article telles qu'elles sont prevues dans le GIA.*			
NATO Form AC-135 No. 28A *Imprime modele OTAN ACI135 No. 28A*	Page 1 of 2 Pages		

DD FORM 180, OCT 87 (EG) PREVIOUS EDITIONS ARE OBSOLETE. PerForm (DLA)

PART "A" RUBRIQUE "A"	ITEM NAME COLLABORATION ACTION REQUEST DEMANDE CONCERNANT LES DENOMINATIONS D'ARTICLE			
DATE JAN 18, 2000	REFERENCE V.4.3 - Az 80.03.23/07398	FIIG/IIG *GIA*		
Item Names, Basic Names, Definitions, Index Entries and Justification Denominations d'articles, denominations de base, definitions, justifications.		INC *Codes denominations*	Appl Key *Code d' applicabilite*	NSC *CLASSE*
ADD: NATO Supply Class UNDERWATER MUNITION FOR EXPLOSIVE ORDNANCE DISPOSAL/ENGAGEMENT Includes: component parts, practice, training, blank, dummy, and other versions. Excludes: torpedos, depth charges, underwater mines. **JUSTIFICATION**: A clear classification of the ordnance items UNDERWATER GUIDED MUNITION, MINE DISPOSAL and UNDERWATER GUIDED MUNITION, MINE RECONNAISSANCE is impossible with the existing commodity classes. Those ordnance items designed to locate/dispose of underwater mines are not explosive charges (NSC 1375) , but include all components required for the reconnaissance, identification, and disposal of mines, such as power unit, guidance and control unit, acoustic and optical identification and locating devices, as well as desstruction charge and fuze. The delimitation against NSC 1355 (torpedoes) and NSC 1360 (depth charges) lies in the technical construction, the operational spectrum, and the tactical application. **P.O.C. - NAME OF SUBMITTER AND PHONE #**:				1352
Above proposed cataloging action will/will not require changes to existing item characteristic data of FIIGs as indicated. *Les propositions ci-dessus entrainent/n'entrainent pas de modifications aux donnees d'identification existantes de l'article telles qu'elles sont prevues dans le GIA.*				
NATO Form AC-135 No. 28A *Imprime modele OTAN AC/135 No. 28A*	Page 2 of 2 Pages			

DD FORM 180, OCT 87 (EG) PREVIOUS EDITIONS ARE OBSOLETE. PerForm IDLA

CHAPTER 6
DEPARTMENT OF DEFENSE AMMUNITION CODES

3.6.1 Scope

The Department of Defense Ammunition Code (DoDAC) system provides uniform, centrally assigned code numbers for generic descriptions applicable to items of supply identified under the Federal Logistics Information System (FLIS) in Federal Supply Groups (FSGs) 13 (Ammunition and Explosives) and 14 (Guided Missiles). In November 2003, training items in Federal Supply classes (FSCs) 6910 and 6920 became eligible for DoDAC assignment. However, these items must be related to items that can receive DoDACs, such as ammunition, grenades, rockets, and guided missiles. The following are excluded from DoDAC assignment.

Items in Federal Supply Classes (FSCs) 1395, 1398, and 1430
Items with Non-Approved Item Names (NAINs)
Repair parts and industrial components (information known by the requesting service)

3.6.2 Structure

The DoDAC is a nine-position, semi-significant number (e.g., 1325-F114) consisting of the four-position FSC number, a hyphen, and a four-position DoDIC (Department of Defense Identification Code). The last four characters may be one alpha followed by three numerics (e.g., D548), or two alphas followed by two numerics (e.g., PA38), or 3 alphas followed by 1 numeric (e.g., PFF1).

a. Logistics Information Services does not assign DoDACs, containing “W”, “X”, “Y”, or “Z” in the seventh position (the second position of the DoDIC, e.g., JW40). The services use these to form codes, which serve internal management functions. The letters have been assigned as follows.

W - Department of the Navy (The local code is a NALC - Navy Ammunition Logistics Code. It can also be an all numeric field.)
X - U.S. Marine Corps
Y - Department of the Air Force (The local code is a LAARC - Locally Assigned Ammunition Reporting Code.)
Z - Department of the Army

b. Logistics Information Services can upgrade these locally assigned codes to DoDACs if they have Approved Item Names (AINs) and are in the correct FSCs, as described in paragraph 3.6.1 above. Logistics Information Services adds the codes to the FLIS DoDAC tables.

3.6.3 Development

Logistics Information Services (Logistics Information Services) is the only organization authorized to assign DoDACs. (Services assign local ammunition codes for internal management functions only, as shown in paragraph 3.6.2.a above.) DoDACs are centrally assigned by Logistics Information Services to generic descriptions submitted by military activities. Each

description consists of an Approved Item Name, appropriate FSC, (See paragraph 3.6.1 above.), and the common characteristics of items which are functionally interchangeable and therefore treated collectively in normal supply operations. A code number initially assigned to a generic description covering a single item will be used subsequently to cover variations or improvements (including different packaging configurations) that are functionally interchangeable with the original item. (It may be necessary to make exceptions. One example is ammunition in packages not suitable for battlefield conditions. A separate DoDAC can identify these items.)

3.6.4 Submittal

A request for the additions, revisions, cancellations, and reinstatements of a DoDAC must include the AIN, FIIG (Federal Item Identification Guide), FSC, generic description, and justification. These requests shall be submitted to the Commander, Logistics Information Services, ATTN: Logistics Information Services-KPN, Hart-Dole-Inouye Federal Center, 74 Washington Ave N Ste 7 Battle Creek, MI 49037-3084. The email address is
dodac@dla.mil. Logistics Information Services assigns DoDACs within three working days. Logistics Information Services completes changes, cancellations, and reinstatements within two weeks, to allow input from using activities.

3.6.5 Publication

DoDACs appear in the FED LOG and H Series CD ROM products. Logistics Information Services updates FED LOG and H Series monthly. Logistics Information Services no longer publishes the DoD Ammunition Catalog CD ROM and the Cataloging Handbook H3 microfiche.